THIS COPY IS PROVIDED ON A RESTRICTED BASIS AND IS NOT TO BE USED IN ANY WAY DETRIMENTAL TO THE INTERESTS OF PANDUIT CORP.

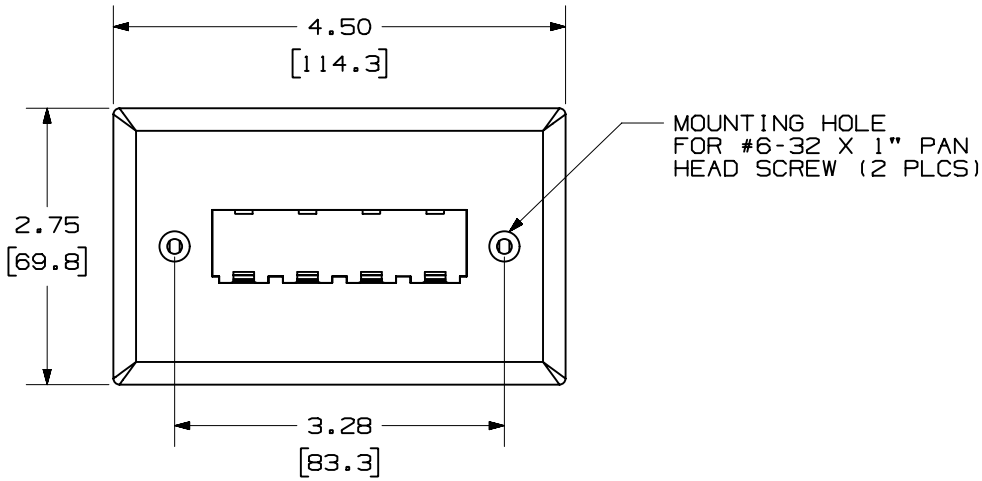

PANDUIT PART NO.	WEIGHT
CFPH4**	.47 LB/10 PCS (214 G/10 PCS)

NOTES:

** 1. SEE CURRENT CATALOG FOR ADDITIONAL PART NUMBER SUFFIXES TO INDICATE COLOR AND OR PACKAGE QUANTITY.

2. TWO #6-32 X 1" LONG, SLOTTED PAN HEAD SCREWS WITH NON-THREADED LEAD POINT PROVIDED FOR FASTENING FACEPLATES.

3. DIMENSIONS IN PARENTHESES ARE IN METRIC.

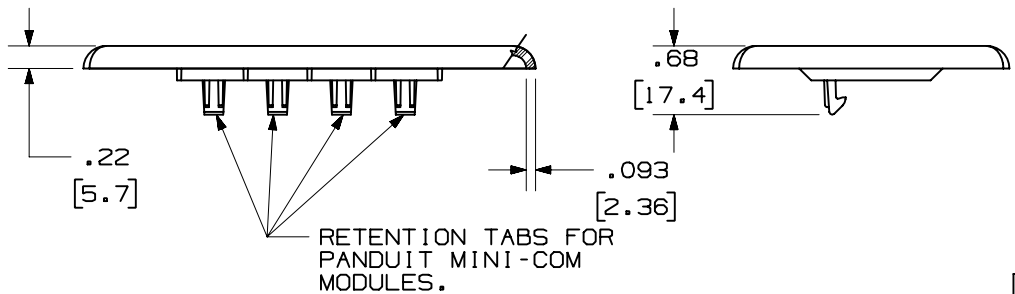

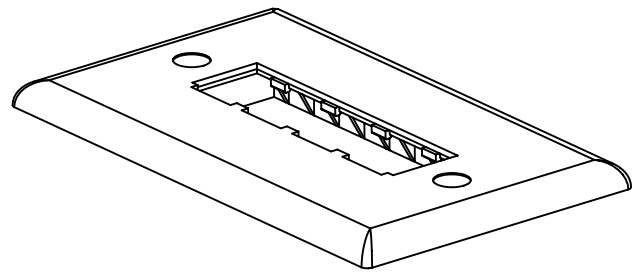

REV	DATE	BY	CHK	DESCRIPTION	ECN - R		CUST	SUP
2	7-13-99	JsP		B. WAS "DESIGNER SERIES".	35544-41			
1	9-11-97	RCA	CEF	A. REV'D TITLE WAS MINI-COM 4 POSITION STANDARD HORIZONTAL FACEPLATE.	35544-41	CEF		
R	4-3-97	RCA	HIW	RELEASED TO PRODUCTION	35544-41	HIW		

CAD FILENAME/LAYERS: D35544CS_DC_CFPH4_00C.PRT

PANDUIT CORP. TINLEY PARK, ILLINOIS

A CLASSIC SERIES 4 POSITION B
HORIZONTAL FACEPLATE (CFPH4**)
CUSTOMER DRAWING

UNLESS OTHERWISE SPECIFIED, DIMENSIONAL TOLERANCES ARE:
(.X) ± (.XXX) ±.010(.3)
(.XX) ±.03(.8) ANGLES ±

UNLESS OTHERWISE SPECIFIED, ALL DIMENSIONS ARE GIVEN IN INCHES, THIRD ANGLE PROJECTION.

DRAWN BY: RCA
DATE: 4-3-97
CHK'D: HIW
MAT'L: ABS
SCALE: NONE
DRAWING NO.: 35544-41
DWG SIZE: A