.XXX = in
XX.X = mm

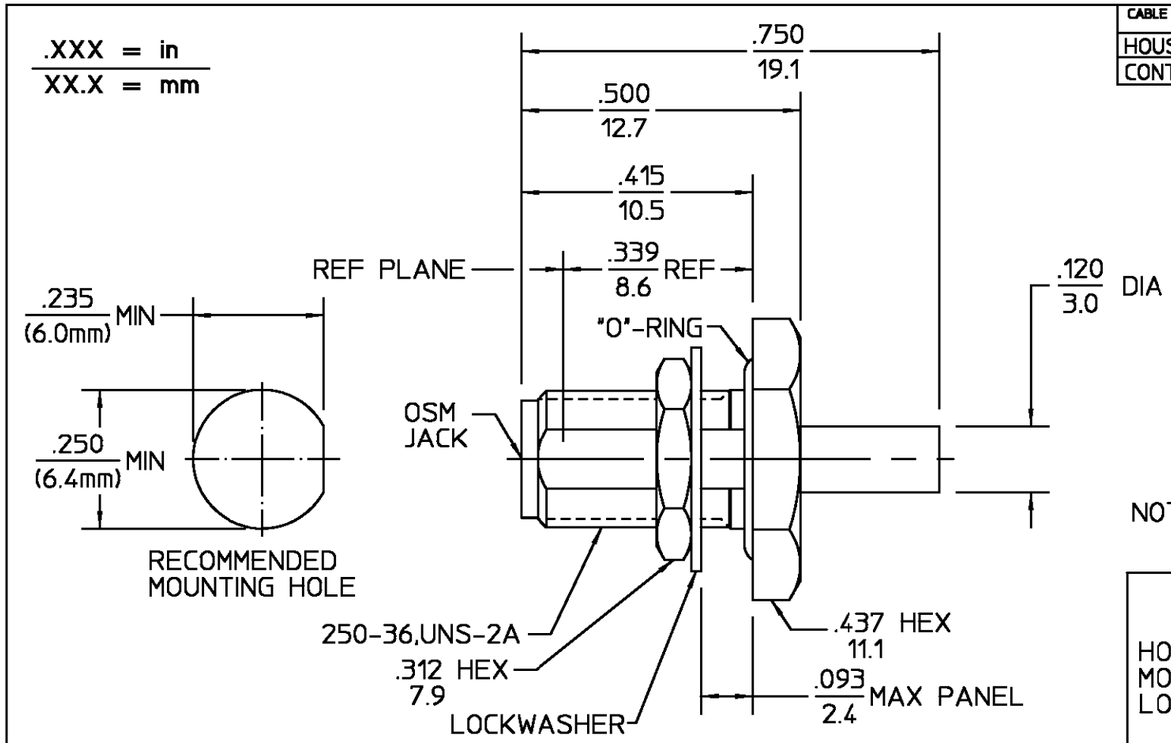

CABLE ENTRY DIAMETER MINIMUM	
HOUSING	.089
CONTACT	.021

REVISIONS

REV	DESCRIPTION	DATE	APPROVED
01_0	RELEASED	5/1/95	

NOTE: DESIGH FOR USE WITH .085 DIA
SEMI-RIGID CABLE

COMPONENT	MATERIAL	FINISH
HOUSING MOUNTING NUT LOCKWASHER	STAINLESS STEEL PER ASTM-A484 AND ASTM-A582, TYPE 303	GOLD PLATE PER MIL-G-45204
DIELECTRIC	TFE FLUOROCARBON PER ASTM-D-1457 AND MIL-P-19468	N/A
CENTER CONTACT	BERYLLIUM COPPER PER ASTM B 196, ALLOY C17300, CONDITION H	GOLD PLATE PER MIL-G-45204
GASKET	SILICONE RUBBER PER ZZ-R-765	N/A

ELECTRICAL	
Nominal Impedance (Ohms)	50
Frequency Range (GHz) DC to	18
Volt Rating (VRMS MAX)	
@ Sea Level	335
VSWR	1.07 +.01f(GHz)
Insertion Loss (dB MAX)	.03 $\sqrt{f(GHz)}$
RF Leakage (dB MIN)	-90 @ 2 to 3 (GHz)
Corona, 70,000 Ft (VRMS MIN)	250
Dielectric Withstanding Voltage	
(VRMS MIN) @ Sea Level	1000
Contact Resistance (Milliohms MAX)	
Center Contact	3.0
Outer Contact	2.0
Cable to Housing	0.5
RF High Potential @ Sea Level	
(VRMS MIN @ 5 MHz)	670
I.R.(Megohms MIN)	10,000

MECHANICAL	
Interface Dimensions MIL-STD-348,	
Fig.	310.2
Recommended Mating	
Torque	7-10 iNLBS
Mating Characteristics:	
Insertion (MAX Lbs)	3.0
Withdrawal (MIN Oz)	1.0
Force to Engage and	
Disengage (In/Lbs MAX)	2.0
Center Contact Captivation	
Axial (Lbs)	6.0
Radial (In/Oz)	N/A
Cable Retention	
Axial Force (Lbs)	30
Torque (In/Oz)	16
Weight (Grams)	3.5

ENVIRONMENTAL
Temperature Rating -65°C to +105°C
Vibration MIL-STD-202, Method 204, Condition D
Shock MIL-STD-202, Method 213, Condition I
Thermal Shock MIL-STD-202, Method 107, Condition B Except High Temp +115°C
Moisture Resistance MIL-STD-202, Method 106, Insulation Resistance Shall Be 200 Megohms min within 5 Minutes After Removal From Humidity
Corrosion - MIL-STD-202, Method 101, Condition B, 5% salt spray

UNLESS OTHERWISE SPECIFIED DIMENSIONS ARE IN INCHES
TOLERANCE ON

FRAC.	DEC.	ANGLES
± 1/64	±.005	± 1°

DRAWN BY DATE 5/1/95
CHECKED BY
APP'D BY 5/1/95

AMP

AMP Incorporated
140 Fourth Avenue
Waltham, MA 02451-7599

These drawings and specifications are the property of Omni Spectra Incorporated and shall not be reproduced or copied or used in whole or in part as the basis for the manufacture or sale of item(s) without written permission.

USE ASS'Y PROCEDURE

NO. A.P. 408-04856 (20-702)

TITLE OSM STRAIGHT BULKHEAD FEEDTHROUGH CABLE JACK DIRECT SOLDER ATTACHMENT

SIZE	CODE IDENT NO.		REV
B	26805	2004-7585-00	01_0
SCALE 4:1			SHEET 1 OF 1

CUSTOMER DRAWING

AMP PART # 1051003-1
SHEET 1 OF 1 REV A