PCM1865-Q1 110 dB 4ch Audio ADCs With Universal Front End

1 Features

- Universal Analog Mic Input, 2.1 V_{RMS} Full Scale
  - 8 Analog Input Pins With MUX and PGA
  - Analog Pre-Mix Function Before PGA/MUX
  - Single-Ended, Pseudo-Differential or Differential Inputs With Mic Bias
  - 4x Digital Microphone Inputs
- Up to 4 Mono ADC Channels (PCM1865-Q1)
- I^2C or SPI Control (PCM1865-Q1)
- H/W Programmable Gain Amplifier
  - Fixed Mic Pregain Select: 20, 32 dB (Analog)
- S/W Programmable Gain Amplifier
- Integrated High Performance Audio PLL
- Single 3.3 V Supply for Analog and Digital
  - Additional 1.8 V Core and Interface for Lower Power Consumption
- Power Dissipation at 3.3 V: <145 mW
- 'Energysense' Audio Content Detector - for Auto System Wakeup and Sleep
- Master or Slave Audio Interface
- Mixer Functionality:
  - Digital Mixer to Mix ADC Outputs and I^2S Synchronous Inputs
  - Zero Crossing PGA Gain Changes
- Automatic PGA Clipping Suppression Control
- PCB-Footprint Compatibility Across All Devices
- Qualified in Accordance With AEC-Q100 for Automotive Applications

2 Applications

- Home Theater and TV
- Automotive Head Units
- Bluetooth® Speaker
- Microphone Array Processors

3 Description

The PCM1865-Q1 audio front-end device takes a new approach to audio-function integration to ease compliance with European Ecodesign legislation while enabling high-performance end products. With no need for a 5-V supply or an external programmable-gain amplifier, smaller, smarter products are feasible at reduced cost.

The PCM1865-Q1's highly flexible audio front end supports input levels from small-mV microphone inputs to 2.1 V_{RMS} line Inputs without external resistor dividers. The PCM1865-Q1 integrates many system-level functions that assist or replace some DSP functions.

All these features are available using a single 3.3-V power supply. An integrated bandgap voltage reference provides excellent PSRR, so that a dedicated analog 3.3-V rail may not be required.

Device Information(1)

PART NUMBER	PACKAGE	BODY SIZE (NOM)
PCM1865-Q1	TSSOP (30)	7.80 mm × 4.40 mm

(1) For all available packages, see the orderable addendum at the end of the document.

4 Simplified Application Diagram

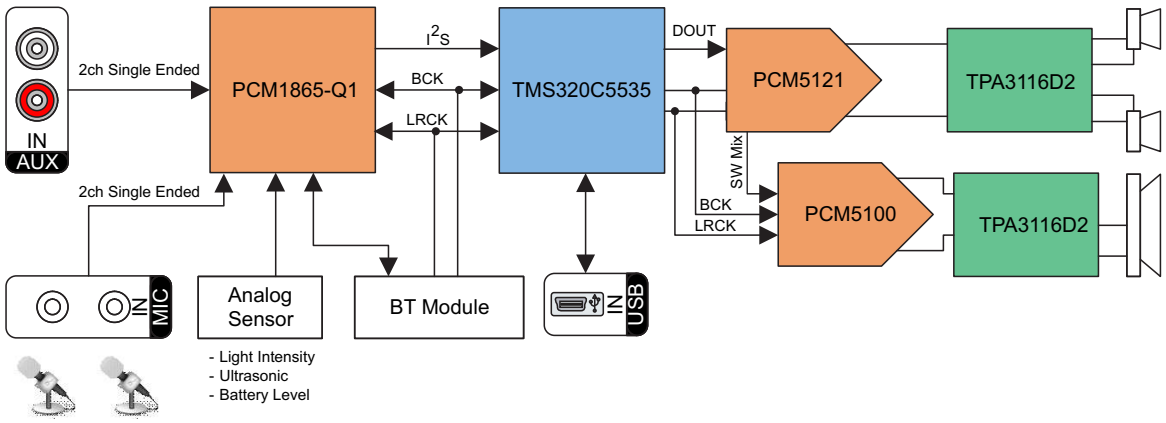

Table of Contents

1 Features ... 1
2 Applications ... 1
3 Description ... 1
4 Simplified Application Diagram ... 1
5 Revision History ... 2
6 Device Comparison Table ... 3
7 Pin Configuration and Functions ... 4
7.1 Pin Assignments ... 4
8 Specifications ... 6
8.1 Absolute Maximum Ratings ... 6
8.2 ESD Ratings ... 6
8.3 Recommended Operating Conditions ... 6
8.4 Thermal Information ... 6
8.5 Electrical Characteristics, DC ... 7
8.6 Electrical Characteristics, Primary PGA and ADC AC Performance ... 8
8.7 Electrical Characteristics, Secondary ADC Performance ... 9
8.8 Digital Filter Characteristics ... 9
8.9 Timing Requirements, External Clock ... 9
8.10 I^2C Control Interface Timing Requirements ... 10
8.11 SPI Control Interface Timing Requirements ... 11
8.12 Typical Characteristics ... 12
9 Parameter Measurement Information ... 14
10 Detailed Description ... 15
10.1 Overview ... 15
10.2 Functional Block Diagram ... 16
10.3 Device Functional Modes ... 17
10.4 Analog Front End ... 18
10.5 Microphone Support ... 19
10.6 PCM1865-Q1 Mixers and Multiplexers ... 19
10.7 Programmable Gain Amplifier ... 21
10.8 Automatic Clipping Suppression ... 21
10.9 Zero Crossing Detect ... 23
10.10 Digital Inputs ... 23
10.11 Clocks ... 25
10.12 ADCs ... 33
10.13 Energysense ... 35
10.14 Audio Processing ... 38
10.15 Fade-In and Fade-Out Functions ... 40
10.16 Mappable GPIO Pins ... 40
10.17 Current Status Registers ... 40
10.18 Control ... 40
10.19 Interrupt Controller ... 43
10.20 Audio Format Selection and Timing Details ... 46
11 Application and Implementation ... 49
11.1 Application Information ... 49
11.2 Typical Application ... 52
12 Power Supply Recommendations ... 53
12.1 Power Supply Distribution and Requirements ... 53
12.2 1.8V Support ... 53
12.3 Power Up Sequence ... 53
12.4 Lowest Power Down Modes ... 53
12.5 Power-On Reset Sequencing Timing Diagram ... 55
12.6 Power Connection Examples ... 55
12.7 Fade In ... 56
13 Layout ... 58
13.1 Layout Guidelines ... 58
13.2 Layout Example ... 60
14 Programming and Registers Reference ... 61
14.1 Coefficient Data Formats ... 61
14.2 Register Map ... 61
14.3 Programming DSP Coefficients ... 100
15 Device and Documentation Support ... 102
15.1 Development Support ... 102
15.2 Trademarks ... 102
15.3 Electrostatic Discharge Caution ... 102
15.4 Glossary ... 102
16 Mechanical, Packaging, and Orderable Information ... 102

5 Revision History

DATE	REVISION	NOTES
December 2014	*	Initial release.

Copyright © 2014, Texas Instruments Incorporated

6 Device Comparison Table

PART NUMBER	CONTROL METHOD	DIFFERENTIAL SNR PERFORMANCE (1)	ANALOG FRONT END	Simultaneous Channel Capability
PCM1860	Hardware	103 dB	1 or $2V_{RMS}$ MUX with fixed PGA gains	2
PCM1861	Hardware	110 dB	1 or $2V_{RMS}$ MUX with fixed PGA gains	2
PCM1862	I^2C or SPI	103 dB	1 or $2V_{RMS}$ MUX, Mix, PGA and Aux ADC	2
PCM1863	I^2C or SPI	110 dB	1 or $2V_{RMS}$ MUX, Mix, PGA and Aux ADC	2
PCM1864	I^2C or SPI	103 dB	1 or $2V_{RMS}$ MUX, Mix, PGA and Aux ADC, 4 mono ADCs	4
PCM1865	I^2C or SPI	110 dB	1 or $2V_{RMS}$ MUX, Mix, PGA and Aux ADC, 4 mono ADCs	4

(1) A weighted data.

Table 1. Typical Performance (3.3-V Supply, –1 dB FS Input)

Parameter	Performance
SNR	110 dB
Single Ended Input Dynamic Range	103 dB
Differential Input Dynamic Range	110 dB
Differential Input THD+N at - 1dBFS	–93 dB
Full Scale Input	$2.1V_{RMS}$
Normal Group Delay:	$30/f_S$
Low Latency - Group Delay Latency:	$10/f_S$
Sampling Frequency	32 kHz to 192 kHz

Copyright © 2014, Texas Instruments Incorporated

7 Pin Configuration and Functions

7.1 Pin Assignments

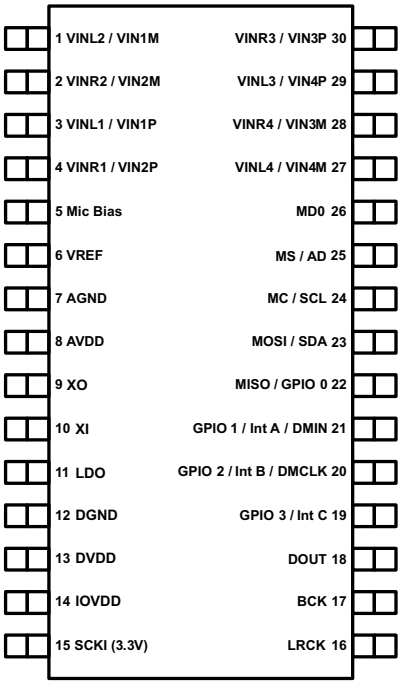

Figure 1. Device Pin Assignments

Pin Functions

PIN		I/O	DESCRIPTIONS
NAME	NO.		
VINL2/VIN1M	1	I	Analog input 2, L-channel (or Differential M input for input 1)
VINR2/VIN2M	2	I	Analog input 2, R-channel (or Differential M input for input 2)
VINL1/VIN1P	3	I	Analog input 1, L-channel (or Differential P input for input 1)
VINR1/VIN2P	4	I	Analog input 1, R-channel (or Differential P input for input 2)
Mic Bias	5	—	Mic Bias
VREF	6	—	Reference voltage decoupling (= 0.5 AVDD)
AGND	7	—	Analog GND
AVDD	8	—	Analog power supply, +3.3 V
XO	9	—	Oscillation amplifier output (Connect External Crystal if needed here)
XI	10	I	Oscillation amplifier input (Connect External Crystal if needed here)
LDO	11	—	LDO output (or +1.8V input to bypass LDO)
DGND	12	—	Digital GND
DVDD	13	—	Digital power supply, +3.3 V
IOVDD	14	—	Power Supply for I/O Voltages (for example, +3.3 V or +1.8 V)
SCKI	15	I	CMOS Level (+3.3 V) Master Clock Input
LRCK	16	I/O	Audio data world clock (Left Right Clock) input/output(1)
BCK	17	I/O	Audio data bit clock input/output(1)
DOUT	18	O	Audio data digital output
GPIO 3 / INT C	19	I/O	GPIO 3 or Interrupt C
GPIO2 / INT B / DMCLK	20	I/O	GPIO 2, Interrupt B or Digital Microphone Clock Output

(1) Schmitt trigger input with internal pull-down (50kΩ typically).

Copyright © 2014, Texas Instruments Incorporated

Pin Assignments (continued)

Pin Functions (continued)

PIN		I/O	DESCRIPTIONS
NAME	NO.		
GPIO1 / INT A / DMIN	21	I/O	GPIO 1, Interrupt A or Digital Microphone Input
MISO / GPIO0 / DMIN2	22	I/O	**SPI-Mode** Master In, Slave Out OR **I2C-Mode** GPIO0, OR DMIN2
MOSI / SDA	23	I/O	**SPI-Mode** Master Out, Slave IN OR **I2C-Mode** SDA
MC / SCL	24	I	**SPI-Mode**Serial Bit Clock **I2C-Mode** Serial Bit Clock
MS / AD	25	I	**SPI-Mode** Chip Select OR **I2C-Mode** Address Pin
MD0	26	I	Control Method Select Pin: I^2C (tied low or not connected) or SPI (tied high)
VINL4/VIN4M	27	I	Analog input 4, L-channel (or Differential M input for input 4)
VINR4/VIN3M	28	I	Analog input 4, R-channel (or Differential M input for input 3)
VINL3/VIN4P	29	I	Analog input 3, L-channel (or Differential P input for input 4)
VINR3/VIN3P	30	I	Analog input 3, R-channel (or Differential P input for input 3)

Copyright © 2014, Texas Instruments Incorporated

8 Specifications

8.1 Absolute Maximum Ratings

over operating temperature (unless otherwise noted) (1)

		MIN	MAX	UNIT
Supply voltage	AVDD to AGND	–0.3	3.9	V
	DVDD to DGND	–0.3	3.9	
	IOVDD to DGND	–0.3	3.9	
Ground voltage differences	AGND, DGND	–0.3	0.3	
Digital input voltage	to DGND	–0.3	IOVDD + 0.3	
XI	to DGND	–0.3	2.1	
Analog input voltage	V_{IN}xx	–1.7	5.0	
T_{stg}	Storage Temperature	–40	125	°C

(1) Stresses beyond those listed under *Absolute Maximum Ratings* may cause permanent damage to the device. These are stress ratings only and functional operation of the device at these or any other conditions beyond those indicated under *Recommended Operating conditions* is not implied. Exposure to absolute-maximum-rated conditions for extended periods may affect device reliability.

8.2 ESD Ratings

			VALUE	UNIT
$V_{(ESD)}$	Electrostatic discharge	Human body model (HBM), per ANSI/ESDA/JEDEC JS-001, all pins(1)	±2000	V
		Charged device model (CDM), per JEDEC specification JESD22-C101, all pins	±1500	

(1) Level listed above is the passing level per ANSI, ESDA, and JEDEC JS-001. JEDEC document JEP155 states that 500V HBM allows safe manufacturing with a standard ESD control process.

8.3 Recommended Operating Conditions

over operating temperature range (unless otherwise noted)

		MIN	NOM	MAX	UNIT
Analog supply voltage	AVDD to AGND	3.0	3.3	3.6	V
Digital supply voltage	DVDD to DGND	3.0	3.3	3.6	V
IO supply voltage to DGND	IOVDD at 1.8V to DGND	1.62	1.8	1.98	V
IO supply voltage to DGND	IOVDD at 3.3V to DGND	3.0	3.3	3.6	V
LDO to DGND	LDO is an input when using external 1.8V power supply	IOVDD – 0.3	IOVDD	IOVDD + 0.3	V
Operating junction temperature range		–40		125	°C

8.4 Thermal Information

over operating temperature range (unless otherwise noted)

THERMAL METRIC(1)		DBT (30 PINS)	UNIT
$R_{\theta JA}$	Junction-to-ambient thermal resistance (2)	91.2	ºC/W
ψ_{JT}	Junction-to-top characterization parameter	1.0	
ψ_{JB}	Junction-to-board characterization parameter	41.5	
$R_{\theta JC}$	Junction-to-case (top) thermal resistance	25.3	
$R_{\theta JB}$	Junction-to-board thermal resistance	42.0	

(1) For more information about traditional and new thermal metrics, see the *IC Package Thermal Metrics* application report, SPRA953.
(2) High K (High Thermal Conductivity, Multilayer Circuit Board)

Copyright © 2014, Texas Instruments Incorporated

8.5 Electrical Characteristics, DC

all specifications at T_A = 25°C, AVDD = 3.3V, DVDD = 3.3V, IOVDD = 3.3V, Master Mode, Single Speed Mode, f_S = 48kHz, system clock = 256×f_S, 24-bit data (unless otherwise noted)

PARAMETER		TEST CONDITIONS	MIN	TYP	MAX	UNIT
Power						
	3.3V AVDD Current	2 ch 48 kHz, XTAL Master Mode		16		mA
	3.3V AVDD Current	4 ch, 48 kHz, Slave mode		31		mA
	3.3V DVDD Current	2 ch 48 kHz, XTAL Master Mode		10		µA
	3.3V DVDD Current	4 ch 48 kHz, XTAL Master Mode		10		µA
	1.8V DVDD Current	DVDD=1.8 V, 2 ch, 48k Hz, XTAL		10		µA
	PSRR	Valid with recommended values on Analog Rails (AVDD, VREF etc)		80		dB
	Power Consumption	48 kHz 2 ch Active 3.3 V source for all		80		mW
	Power Consumption	48 kHz Sleep (Energysense) 3.3 V source for all		24		mW
	Power Consumption	48 kHz Standby 3.3 V source for all		0.59		mW
	Power Consumption	48 kHz 4ch Active 3.3 V source for all		145		mW
	3.3V AVDD Current	2 ch 48 kHz with XTAL - Sleep Mode		2.7		mA
	3.3V AVDD Current	2 ch 48 kHz with XTAL - Standby Mode		17.1		mA
	3.3V AVDD Current	2 ch 48 kHz with XTAL - Powerdown Mode		1.2		mA
	3.3V DVDD Current	3.3 V DVDD 2 ch Mode, 48 kHz, Master Mode - Sleep Mode		353		µA
	3.3V DVDD Current	3.3 V DVDD 2 ch Mode, 48 kHz, Master Mode - Standby Mode		353		µA
	3.3V DVDD Current	3.3 V DVDD 2 ch Mode, 48 kHz, master mode - Powerdown		353		µA
	1.8V DVDD Current	DVDD=1.8 V, 2 ch, 48 kHz, XTAL.- Sleep Mode		384		µA
	1.8V DVDD Current	DVDD=1.8 V, 2 ch, 48 kHz, XTAL.- Powerdown		384		µA
	1.8V DVDD Current	DVDD=1.8 V, 2 ch, 48 kHz, XTAL. Powerdown		384		µA
	Power Consumption (3.3V AVDD, 1.8V DVDD)	48 kHz 2 ch Active 3.3 V analog, 1.8 V digital		68		mW
	Power Consumption (3.3V AVDD, 1.8V DVDD)	48 kHz 4 ch Active 3.3 V analog, 1.8 V digital		128		mW
	3.3V AVDD Current	4 ch, 48 kHz, Master mode		31		mA
Mic Bias						
	Mic Bias Noise			5		µVRMS
	Mic Bias Current Capability			4		mA
	Mic Bias Voltage			2.6		V
Digital IO						
V_{OH}	Output Logic "High" Voltage Level	IOH = 2 mA		75		%IOVDD
V_{OL}	Output Logic "Low" Voltage Level	IOL = –2mA		25		%IOVDD
$|I_{IH}|$1	Input Logic "High" Current Level	All digital pins			10	µA
$|I_{IL}|$1	Input Logic "Low" Current Level	All digital pins			–10	µA

Copyright © 2014, Texas Instruments Incorporated

8.6 Electrical Characteristics, Primary PGA and ADC AC Performance

all specifications at T_A = 25°C, AVDD = 3.3V, DVDD = 3.3V, IOVDD = 3.3V, Master Mode, Single Speed Mode, f_S = 48kHz, system clock = 256×f_S, 24-bit data (unless otherwise noted)

PARAMETER		TEST CONDITIONS	MIN	TYP	MAX	UNIT
	Input Channel Signal to Noise ratio	0 dB PGA Gain, –60dB input signal, Master Mode. at DIFF Input	97	110		dB
	Input Channel Signal to Noise ratio at 32 dB	32 dB PGA Gain, –86dB input signal, Master Mode at DIFF Input		90		dB
	Input Channel THD+N	0 dB PGA Gain, –1dB input signal, Master Mode at DIFF Input	–85	–93		dB
	Input Channel THD+N at 32 dB	32 dB PGA Gain, –33dB input signal, Master Mode at DIFF Input		–84		dB
	L channel to R channel separation line input	0 dB PGA Gain, –1dB input signal, Master Mode		–105		dB
	L channel to R channel separation mic input	20 dB PGA Gain, –1dB input signal, Master Mode		–105		dB
	L1 channel to L2 channel separation line input	0 dB PGA Gain, –1dB input signal, Master Mode		–105		dB
	R1 channel to R2 channel separation line input	0 dB PGA Gain, –1dB input signal, Master Mode		–105		dB
	L1 channel to L2 channel separation mic input	20 dB PGA Gain, –1dB input signal, Master Mode		–105		dB
	R1 channel to R2 channel separation mic input	20 dB PGA Gain, –1dB input signal, Master Mode		–105		dB
	Range of the analog PGA	–12 to +12 dB (1 dB STEP) , 20 dB and 32 dB	–12 (1)		32	dB
	Accuracy of the PGA + ADC			0.5		dB
	Matching between PGA + ADCs onchip			0.05		dB
	Full Scale Voltage Input per input pin	Single Ended Mode			2.1	V_{RMS}
	Full Scale Voltage Input per input pin	Differential Input Mode (2.1 V_{RMS} Per Pin, Out Of phase)			4.2	V_{RMS}
	Input Channel Signal to Noise ratio	0 dB PGA Gain, –60 dB input signal, Master Mode. at SE input		110		dB
	Input Channel Signal to Noise ratio at 32dB	32 dB PGA Gain, –92 dB input signal, Master Mode at SE input		75		dB
	Input Channel THD+N	0 dB PGA Gain, –1 dB input signal, Master Mode at SE input		87		dB
	Input Channel THD+N at 32dB	32 dB PGA Gain, –33 dB input signal, Master Mode at SE input		68		dB
	Input Impedance per analog input pin			10		kΩ
CMRR	Common Mode Rejection Ratio	Differential Input, 1 kHz signal on both pins and measure level at output.		56		dB

(1) Specified by design.

Copyright © 2014, Texas Instruments Incorporated

8.7 Electrical Characteristics, Secondary ADC Performance

all specifications at T_A = 25°C, AVDD = 3.3V, DVDD = 3.3V, IOVDD = 3.3V, Master Mode, Single Speed Mode, f_S = 48kHz, system clock = 256×f_S, 24-bit data (unless otherwise noted)

PARAMETER	TEST CONDITIONS	MIN	TYP	MAX	UNIT
Energysense Detection Threshold			–57		dBFS
Energysense Signal Bandwidth			10		kHz
Energysense Accuracy(1)			3		dB
Secondary ADC Accuracy			12		bits
Secondary ADC Sampling Rate			same as audio sampling rate		

(1) Specified by design.

8.8 Digital Filter Characteristics

all specifications at T_A = 25°C, AVDD = 3.3V, DVDD = 3.3V, IOVDD = 3.3V, Master Mode, Single Speed Mode, f_S = 48kHz, system clock = 256×f_S, 24-bit data (unless otherwise noted)

PARAMETER	TEST CONDITIONS	MIN	TYP	MAX	UNIT
Classic FIR					
Pass Band			0.454		f_S
Stop Band			0.583		f_S
Pass Band Ripple			±0.05		dB
Stop Band Attenuation			–65		dB
Group Delay / Latency			30		Samples
HPF Frequency Response			1		Hz
Low Latency IIR					
Pass Band			0.454		f_S
Stop Band			0.546		f_S
Pass Band Ripple			±0.02		dB
Stop Band Attenuation			–75		dB
Group Delay / Latency			10		Samples
HPF Frequency Response			1		Hz

8.9 Timing Requirements, External Clock

all specifications at T_A = 25°C, AVDD = 3.3V, DVDD = 3.3V, IOVDD = 3.3V, Master Mode, Single Speed Mode, f_S = 48kHz, system clock = 256×f_S, 24-bit data (unless otherwise noted)

		MIN	TYP	MAX	UNIT
XTAL Support		15		35	MHz
MCLK Frequency	3.3 V on MCLK Pin	1		50	MHz
MCLK	1.8 V MCLK Input on XI pin.	1		50	MHz
MCLK Input Duty Cycle	1.8 V	48%		52%	

Copyright © 2014, Texas Instruments Incorporated

8.10 I²C Control Interface Timing Requirements

		CONDITIONS	MIN	MAX	UNIT
f_{SCL}	SCL clock frequency	Standard		100	kHz
		Fast		400	kHz
t_{BUF}	Bus free time between a STOP and START condition	Standard	4.7		µs
		Fast	1.3		
t_{LOW}	Low period of the SCL clock	Standard	4.7		µs
		Fast	1.3		
t_{HI}	High period of the SCL clock	Standard	4.0		µs
		Fast	600		ns
t_{RS-SU}	Setup time for (repeated) START condition	Standard	4.7		µs
		Fast	600		ns
t_{S-HD}	Hold time for (repeated) START condition	Standard	4.0		µs
t_{RS-HD}		Fast	600		ns
t_{D-SU}	Data setup time	Standard	250		ns
		Fast	100		
t_{D-HD}	Data hold time	Standard	0	900	ns
		Fast	0	900	
t_{SCL-R}	Rise time of SCL signal	Standard	$20 + 0.1C_B$	1000	ns
		Fast	$20 + 0.1C_B$	300	
t_{SCL-R1}	Rise time of SCL signal after a repeated START condition and after an acknowledge bit	Standard	$20 + 0.1C_B$	1000	ns
		Fast	$20 + 0.1C_B$	300	
t_{SCL-F}	Fall time of SCL signal	Standard	$20 + 0.1C_B$	1000	ns
		Fast	$20 + 0.1C_B$	300	
t_{SDA-R}	Rise time of SDA signal	Standard	$20 + 0.1C_B$	1000	ns
		Fast	$20 + 0.1C_B$	300	
t_{SDA-F}	Fall time of SDA signal	Standard	$20 + 0.1C_B$	1000	ns
		Fast	$20 + 0.1C_B$	300	
t_{P-SU}	Setup time for STOP condition	Standard	4.0		µs
		Fast	600		ns
C_B	Capacitive load for SDA and SCL line			400	pF
t_{SP}	Pulse width of spike suppressed	Fast		50	ns
V_{NH}	Noise margin at High level for each connected device (including hysteresis)		$0.2V_{DD}$		V

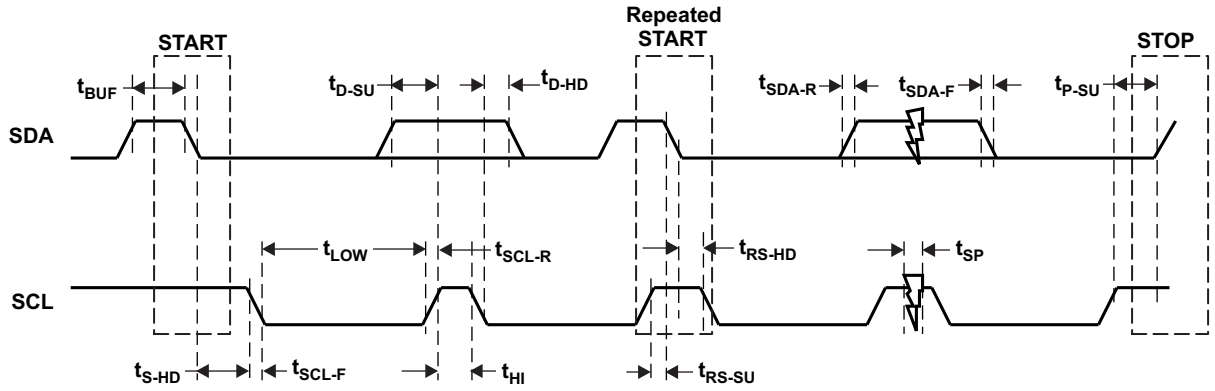

Figure 2. I²C Control Interface Timing

Copyright © 2014, Texas Instruments Incorporated

8.11 SPI Control Interface Timing Requirements

		MIN	MAX	UNIT
t_{MCY}	MC Pulse Cycle Time	100		ns
t_{MCL}	MC Low Level Time	40		ns
t_{MCH}	MC High Level Time	40		ns
t_{MHH}	High Level Time	20		ns
t_{MSS}	Fall Edge to MC Rise Edge	30		ns
t_{MSH}	Hold Time(1)	30		ns
t_{MDH}	MOSI Hold Time	15		ns
t_{MDS}	MOSI Set-up Time	15		ns
t_{MOS}	MC Rise Edge to MDO Stable		20	ns

(1) MC fall edge for LSB to MS rise edge.

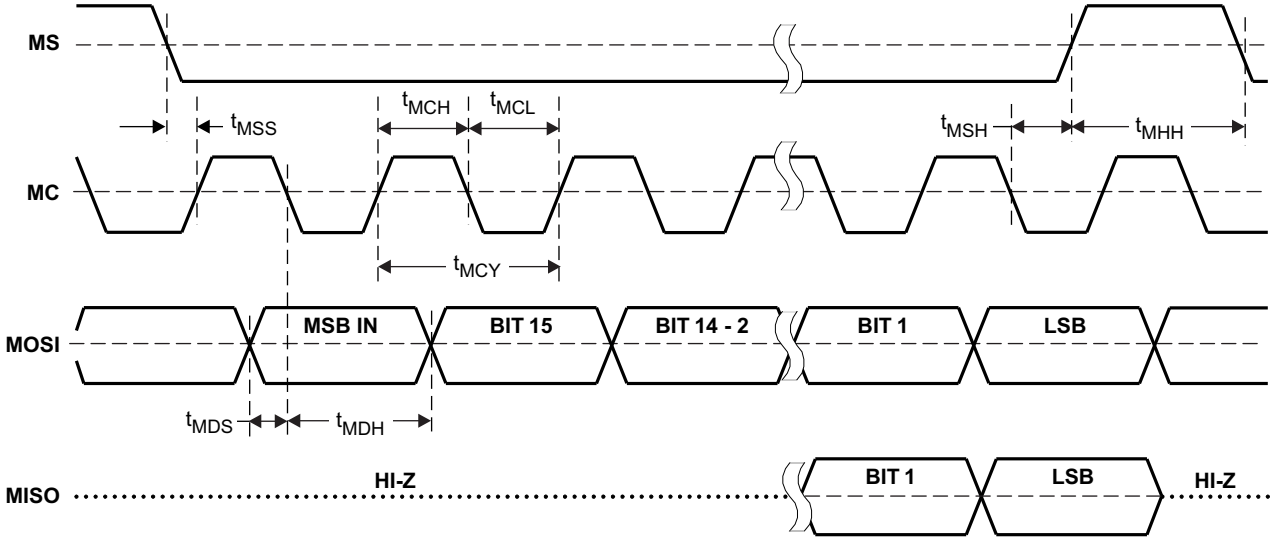

Figure 3. SPI Control Interface Timing

8.12 Typical Characteristics

all specifications at T_A = 25°C, AVDD = 3.3V, DVDD = 3.3V, IOVDD = 3.3V, Master Mode, Single Speed Mode, f_S = 48kHz, system clock = 256×f_S, 24-bit data (unless otherwise noted)

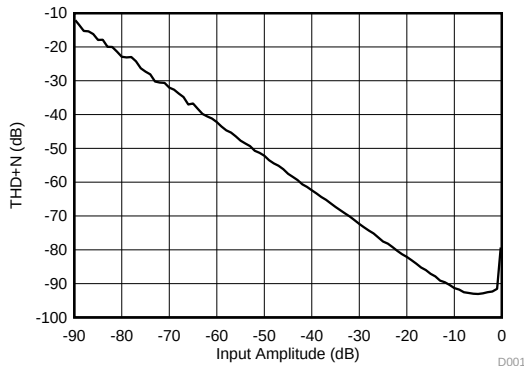

Figure 4. THD+N vs Input Level

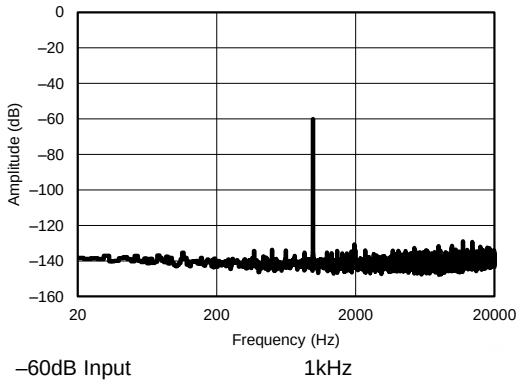

Figure 5. Frequency Response

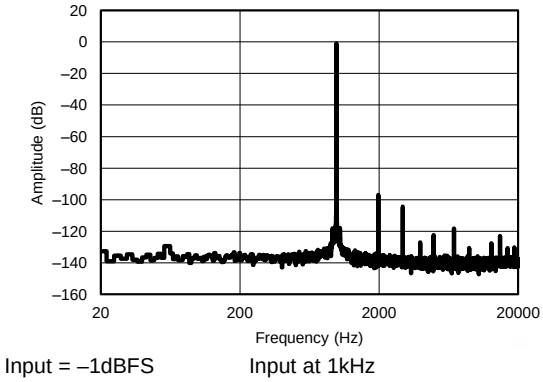

Figure 6. Frequency Response

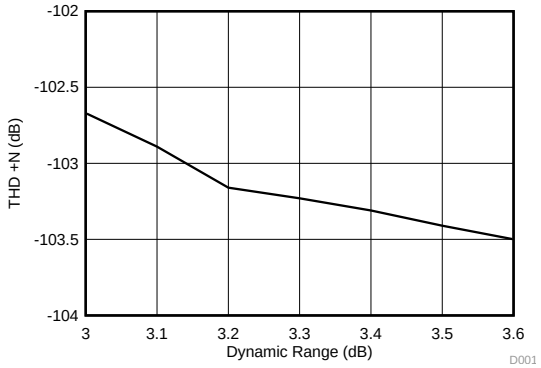

Figure 7. Dynamic Range vs Supply Voltage

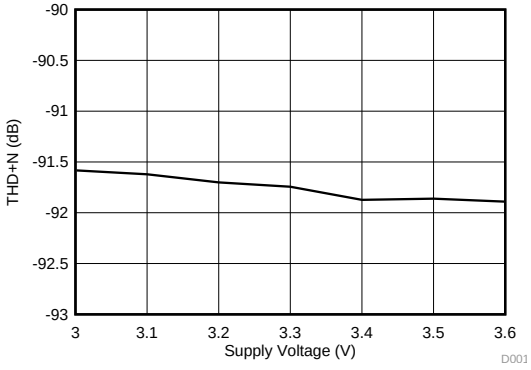

Figure 8. THD+N vs Supply Voltage

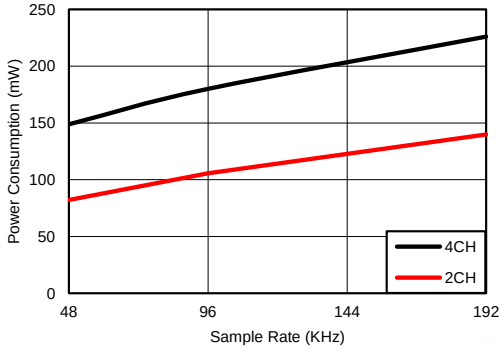

Figure 9. Power Consumption vs Sample Rate

Copyright © 2014, Texas Instruments Incorporated

Typical Characteristics (continued)

all specifications at T_A = 25°C, AVDD = 3.3V, DVDD = 3.3V, IOVDD = 3.3V, Master Mode, Single Speed Mode, f_S = 48kHz, system clock = 256×f_S, 24-bit data (unless otherwise noted)

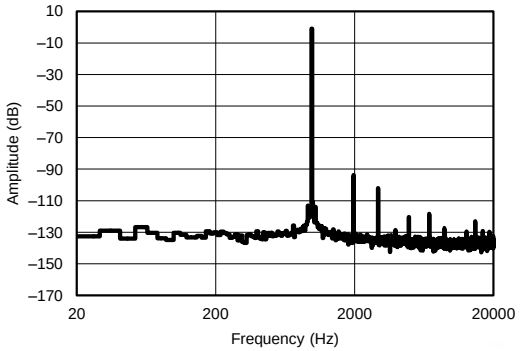

f_S = 192kHz Input = –1dBFS Input at 1kHz

Figure 10. FFT with -1dBFS input

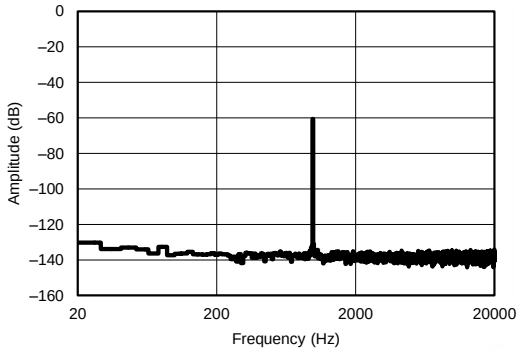

f_S = 192kHz Input = –60dBFS Input at 1kHz

Figure 11. FFT with -60dBFS input

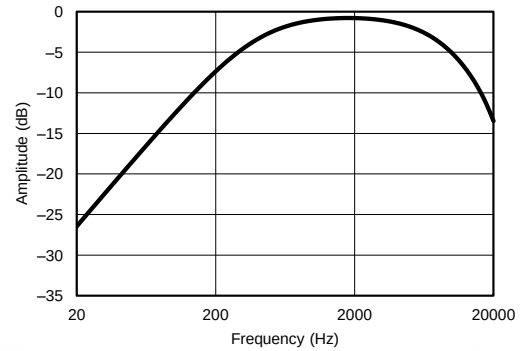

f_S = 48kHz

Figure 12. Seconday ADC Frequency Response

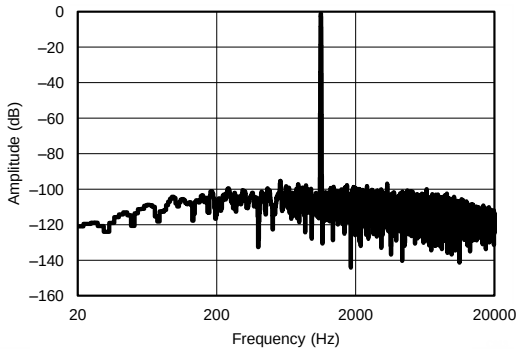

f_S = 48kHz

Figure 13. Secondary ADC FFT

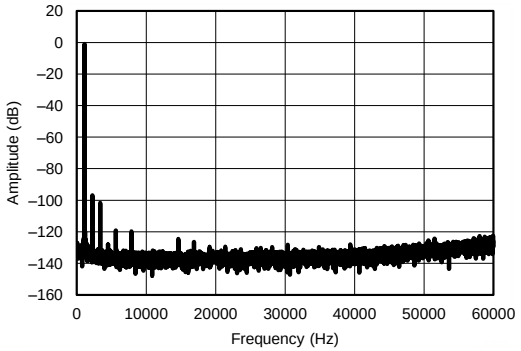

f_S = 192kHz BW = 60kHz Input = –1dBFS

Figure 14. High Bandwidth FFT of THD Components

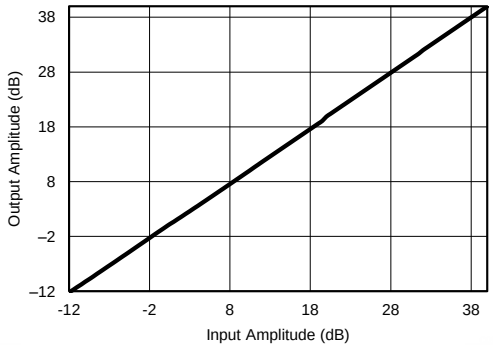

Figure 15. PGA ADC Gain

Typical Characteristics (continued)

all specifications at T_A = 25°C, AVDD = 3.3V, DVDD = 3.3V, IOVDD = 3.3V, Master Mode, Single Speed Mode, f_S = 48kHz, system clock = 256×f_S, 24-bit data (unless otherwise noted)

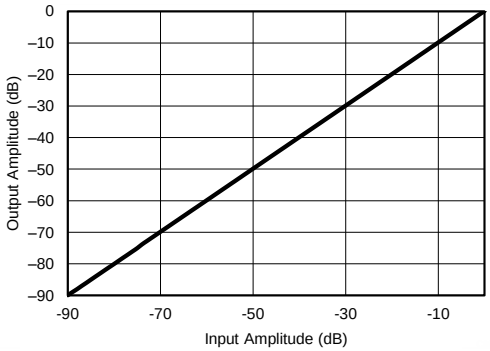

Figure 16. Linearity, Input vs Output

9 Parameter Measurement Information

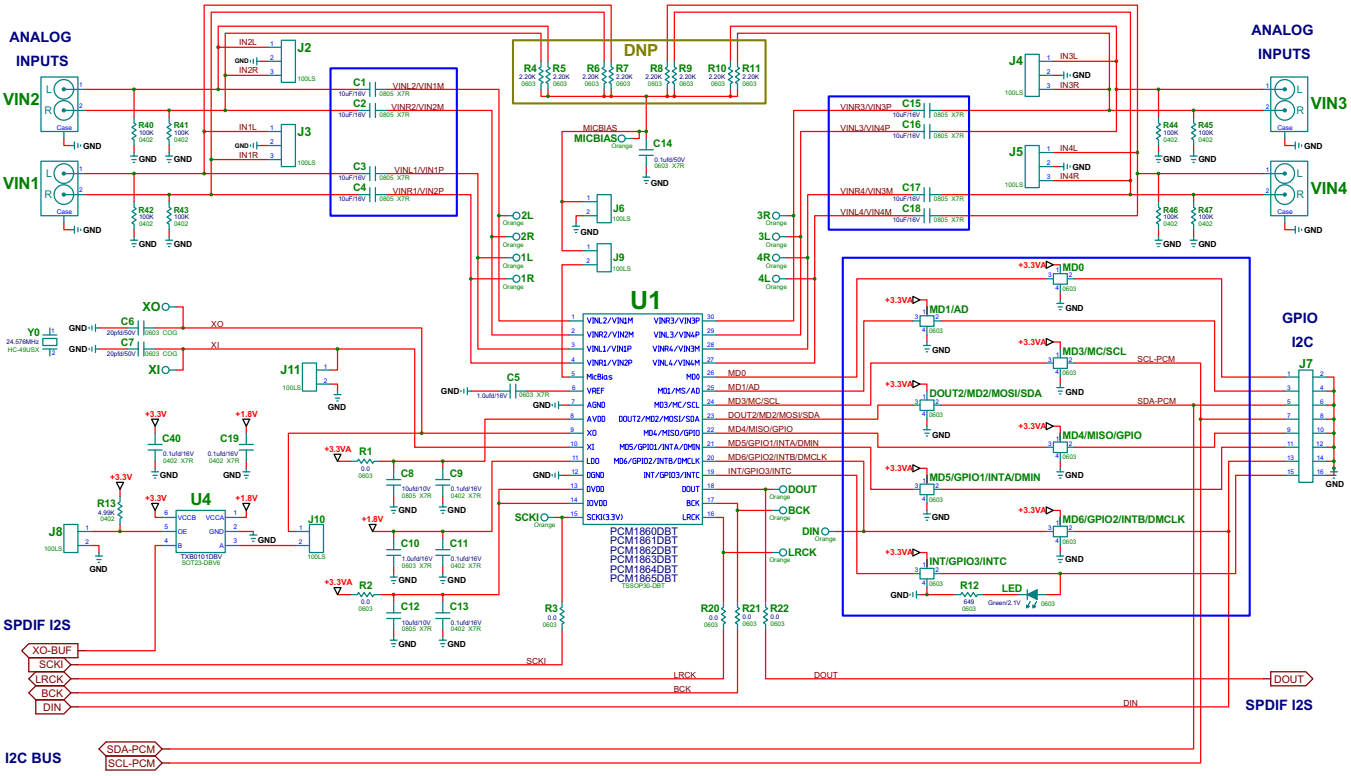

Figure 17. PCM1865-Q1 Test Circuit

All typical characteristics for the devices are measured using the EVM and an Audio Precision SYS-2722 Audio Analyzer. A PSIA interface is used to allow the I2S interface to be driven directly into the SYS-2722.

Copyright © 2014, Texas Instruments Incorporated

10 Detailed Description

10.1 Overview

The PCM1865-Q1 supports advanced clocking support with the aid of an integrated oscillator circuit and an onchip analog PLL. The integrated oscillator circuit allows the capability to use an external crystal or an external Master clock as the clock source in Master mode. In addition, the PLL can be used to generate an onchip master clock that can be shared with the rest of the system, all from a bit clock input. This is especially useful in systems where the audio source has no master clock to drive DACs and amplifiers. The onchip clock monitoring system can also be used to generate interrupts for the system microcontroller, should clocks be lost.

The secondary ADC is a lower power, non-audio ADC that is used in sleep mode to monitor the analog inputs. It can also be used in ControlSense mode to measure DC voltages in a system, such as battery voltage, control potentiometers. Additional Controlsense features are the ability to generate interrupts once detected voltages cross specific thresholds, allowing the microcontroller to be in a lower power sleep mode while control voltages being measured are stable.

Control registers in this datasheet are given by **REGISTER BIT/BYTE NAME (Page.x HEX ADDRESS).** SE refers to "Single Ended" analog inputs, DIFF refers to "Differential" analog inputs. SCK (System Clock) and MCLK (Master Clock) are used interchangeably. Sampling frequency is symbolized by "f_S". Full scale is symbolized by "FS". Sample time as a unit is symbolized by "t_S".

Copyright © 2014, Texas Instruments Incorporated

10.2 Functional Block Diagram

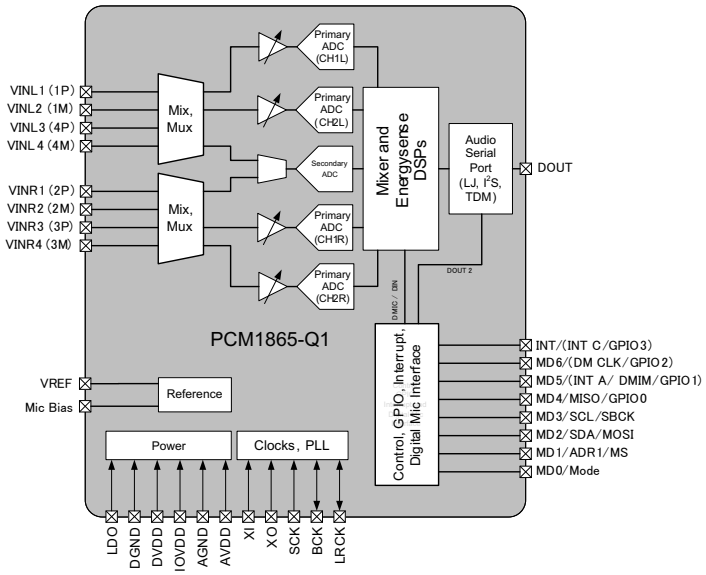

Figure 18. Simplified Block Diagram

An internal block diagram of the PCM1865-Q1 is shown below. Note that power supplies and references have been omitted from this diagram to aid simplicity. Dotted lines (for the PGA and the additional ADC's) are for the 4ch devices only. Greyed out pins are the multifunction pins only.

Copyright © 2014, Texas Instruments Incorporated

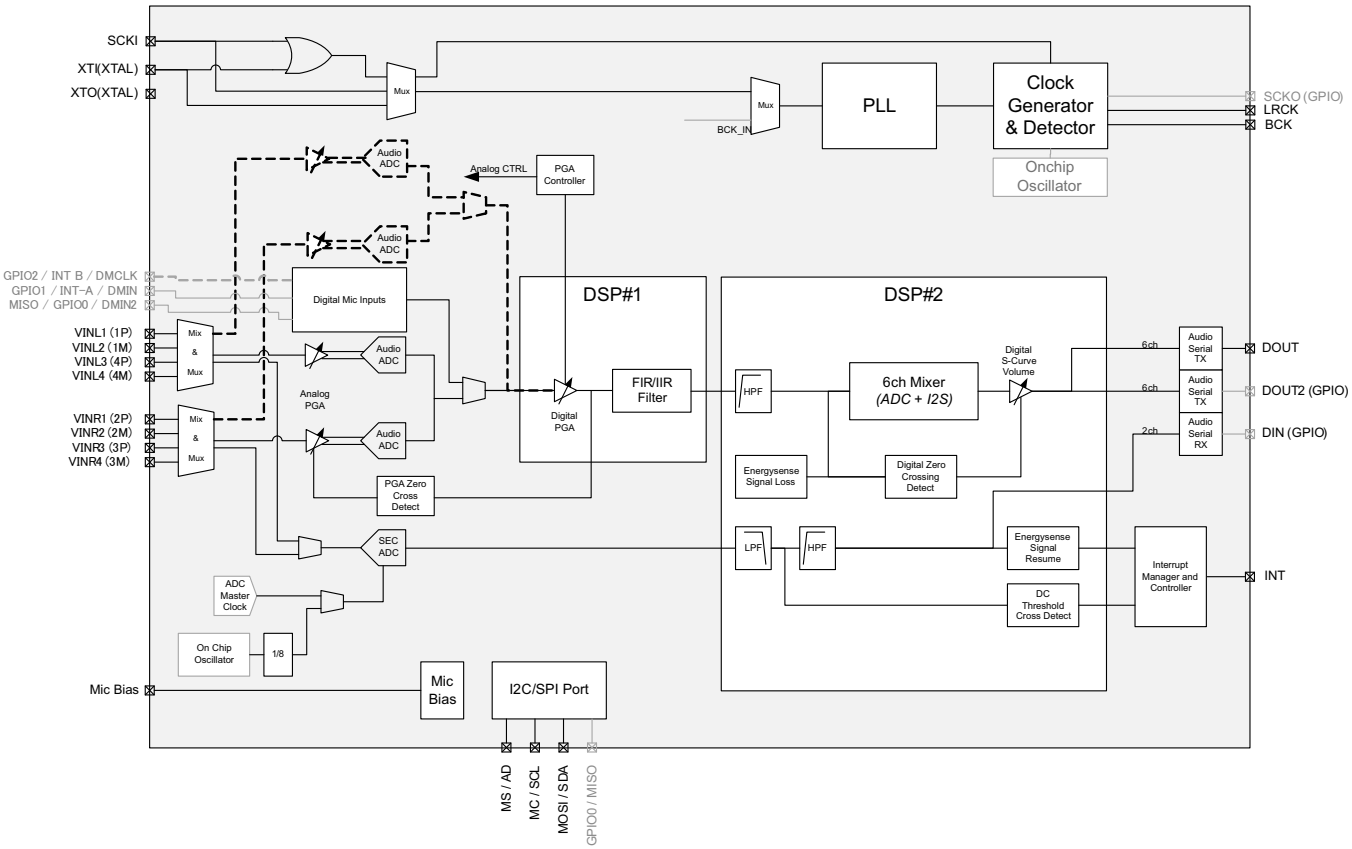

Figure 19. Internal Block Diagram of the PCM1865-Q1

10.3 Device Functional Modes

10.3.1 Power Mode Descriptions

The PCM1865-Q1 has multiple power states. They are Active, Sleep, Idle, and Standby.

Active Mode describes the active mode where the device is targeting full performance and functionality.

Sleep Mode describes a mode where the main ADCs are not in use, but the device continues to do Energysense input level detection.

Idle Mode describes a mode where the digital output is muted and the analog side (such as PGAs) are still powered up.

Standby / Shutdown drops the power into an ultra-low power mode where only the control port is available.

Table 2. Power Modes

Analog Functions	Active or Idle (Mute)	Sleep (Energysense)	Standby / Shutdown
Programmable Gain Amps	ON	OFF	OFF
ADC	ON	OFF	OFF
ADC Reference	ON	OFF	OFF
CMBF	ON	ON	ON
Reference	ON	ON	ON
Mic Bias	ON	ON	OFF
Secondary ADC PGA	ON	ON	OFF
Secondary PGA	ON	ON	OFF

Copyright © 2014, Texas Instruments Incorporated

Table 2. Power Modes (continued)

Analog Functions	Active or Idle (Mute)	Sleep (Energysense)	Standby / Shutdown
Accessory Functions			
LDO	ON	ON	ON
Oscillator	ON	ON	ON
Clock Halt Detection	ON	ON	ON
PLL	ON	ON	OFF
Digital Cores	ON	20% ON	5% ON (Control Port Only)

10.3.1.1 PCM1865-Q1 Software Device Power Down Functions

Enter or Exit Stand-by mode for Software Controlled Device

Enter standby mode: Send power down command by writing register **PWRDN_CTRL (Page.0 0x70)**

Exit standby mode: Send power up command by writing register **PWRDN_CTRL (Page.0 0x70)**

Enter or Exit Sleep mode for Software Device:

(1) Send sleep command by writing register **PWRDN_CTRL (Page.0 0x70)** or

(2) Halt BCK and LRCK when I^2S is configured as I^2S Slave mode

Exit Sleep mode:

(1) Send resume from (exit) sleep command by writing register PWRDN_CTRL or

(2) Resume BCK and LRCK when I^2S is configured as I^2S master mode

10.3.1.2 Bypassing the Internal LDO To Reduce Power Consumption

The PCM1865-Q1 has an integrated LDO allowing single 3.3-V supply operation. However, developers desiring to minimize power consumption can bypass the on-chip LDO and provide 1.8V to DVDD under the following conditions:

- TDM Mode is not possible (the I/O or other function requires 3.3V)
- IOVDD MUST be 1.8V along with LDO, if an external 1.8V supply is used to bypass the internal LDO.

10.4 Analog Front End

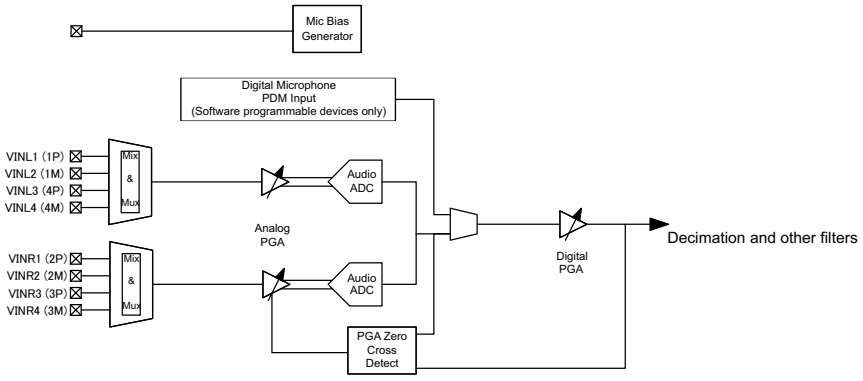

Figure 20. High Level View of PCM1865-Q1 Front End Circuitry

The PCM1865-Q1 has a universal front end that accepts differential or single-ended inputs, from microphone level to $2.1V_{RMS}$. The highest performance (up to 110 dB SNR) can be achieved using differential inputs. In differential mode, the full scale voltage is defined as 4.2VRMS, where each pin is 2.1VRMS, out of phase.

Copyright © 2014, Texas Instruments Incorporated

Analog Front End (continued)

The front-end Mix and MUX circuit allows both differential and single-ended inputs to be used in the products, as well as direct Input mixing. This feature is mainly enabled on the software-controlled devices, while the hardware-controlled devices support single-ended or differential inputs. The Mix and MUX circuits are summing circuits, done pre-PGA. No individual volume controls are available before the PGA.

DC blocking capacitors are required on the inputs, to ensure that the DC bias conditions are known (assumed to be GND, but **not** certain). Also, the value of the output short-circuit protection resistor in the source product is not known, which could cause issues such as gain error and DC shift.

10.5 Microphone Support

The PCM1865-Q1 supports analog and digital microphones. Analog signals are treated in much the same way as line-level signals, except for the requirement for mic bias. Digital microphone Inputs (PDM inputs) use GPIOs on the device. Two-channel ADC variants of the PCM1865-Q1 can support two digital microphones using a single data pin and a single clock pin. The 4-channel variants can support up to 4 digital microphones (2 data pins).

The PCM1865-Q1 software programmable devices support electret condenser mics through a mic bias circuit and a PGA input providing up to 32 dB of gain.

Digital microphones typically have a PDM output that can be brought into an ADC digital decimation filter. PDM microphones require power and a clock. Power should be handled from an external source.

Digital microphone mode Gain can be added in the digital PGA and in the mixer. The Maximum gain is 30 dB (18 dB in the mixer + 12 dB in the digital PGA).

On the PCM1865-Q1, a 2-channel digital mic + 2-channel ADC mode is possible.

10.5.1 Mic Bias

The PCM1865-Q1 can provide a microphone bias to power and bias microphones at 2.6V on pin 5. Mic Bias should be decoupled/filtered with an external capacitor. Mic Bias is typically used with a electret microphone. An on-chip series resistor can be bypassed using register **MIC_BIAS_CTRL (Page.3, 0x15).** By default, the device is configured to bypass the on-chip resistor.

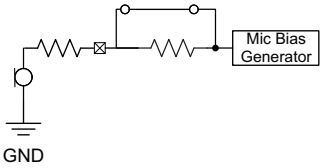

Figure 21. On-Chip Mic Bias Resistor Bypassed (Default)

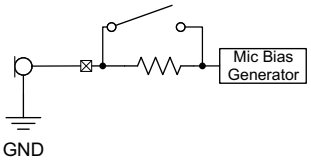

Figure 22. On-Chip Mic Bias Resistor In Use

10.6 PCM1865-Q1 Mixers and Multiplexers

The PCM1865-Q1 software programmable devices offer a mix/multiplex level of functionality on the front end as shown in Figure 20. The switches integrated into the multiplexer can also be switched on in parallel, offering a direct mix of inputs. This function can be selected by register for each ADC input selection, **ADCX1_INPUT_SEL_X (Page.0, 0x06 → 0x09)**. In single ended mode, each Audio ADC is tightly coupled to a dedicated PGA and MUX. ADC1L (and ADC2L on the PCM1865-Q1) is connected a mux that has input pins VINLx, (x = 1 to 4). ADC1R (and ADC2R on the PCM1865-Q1) is connected to a mux that has input pins VINRx (x = 1 to 4).

Mixing between the left channels of stereo pairs is possible in the mux dedicated to ADC1L and right channels of stereo pairs in the mux dedicated to ADC1R. In addition, polarity of the inputs can be inverted using the MSB of the select register. Mixing left and right sources to create mono mixes can only be done in the digital mixer, post ADC conversion, or alternatively, other analog inputs can be connected for mixing.

The examples available are below - where [SE] is single ended, and [DIFF] is a differential input. Bold items are the single channel selects.

Copyright © 2014, Texas Instruments Incorporated

PCM1865-Q1 Mixers and Multiplexers (continued)

Table 3. MUX, Mix, and Polarity Input Selection

Register Code	ADC1L and ADC2L	ADC1R and ADC2R
0x00	No Selection (Mute)	No Selection (Mute)
0x01	**VINL1[SE] (Default)**	**VINR1[SE] (Default)**
0x02	**VINL2[SE]**	**VINR2[SE]**
0x03	VINL2[SE] + VINL1[SE]	VINR2[SE] + VINR1[SE]
0x04	**VINL3[SE]**	**VINR3[SE]**
0x05	VINL3[SE] + VINL1[SE]	VINR3[SE] + VINR1[SE]
0x06	VINL3[SE] + VINL2[SE]	VINR3[SE] + VINR2[SE]
0x07	VINL3[SE] + VINL2[SE] + VINL1[SE]	VINR3[SE] + VINR2[SE] + VINR1[SE]
0x08	**VINL4[SE]**	**VINR4[SE]**
0x09	VINL4[SE] + VINL1[SE]	VINR4[SE] + VINR1[SE]
0x0A	VINL4[SE] + VINL2[SE]	VINR4[SE] + VINR2[SE]
0x0B	VINL4[SE] + VINL2[SE] + VINL1[SE]	VINR4[SE] + VINR2[SE] + VINR1[SE]
0x0C	VINL4[SE] + VINL3[SE]	VINR4[SE] + VINR3[SE]
0x0D	VINL4[SE] + VINL3[SE] + VINL1[SE]	VINR4[SE] + VINR3[SE] + VINR1[SE]
0x0E	VINL4[SE] + VINL3[SE] + VINL2[SE]	VINR4[SE] + VINR3[SE] + VINR2[SE]
0x0F	VINL4[SE] + VINL3[SE] + VINL2[SE] + VINL1[SE]	VINR4[SE] + VINR3[SE] + VINR2[SE] + VINR1[SE]
0x10	**{VIN1P, VIN1M}[DIFF]**	**{VIN2P, VIN2M}[DIFF]**
0x20	**{VIN4P, VIN4M}[DIFF]**	**{VIN3P, VIN3M}[DIFF]**
0x30	{VIN1P, VIN1M}[DIFF] + {VIN4P, VIN4M}[DIFF]	{VIN2P, VIN2M}[DIFF] + {VIN3P, VIN3M}[DIFF]

Copyright © 2014, Texas Instruments Incorporated

10.7 Programmable Gain Amplifier

The PCM1865-Q1 has a two-stage programmable gain amplifier (PGA). Coarse gain adjustment is done in the analog domain, whilst fine gain adjustment is done in the digital domain. The ±12 dB Analog gain steps are designed for varying line level inputs, whilst the +20 dB and +32 dB are primarily designed for microphone inputs, which will likely need additional gain that can be done in the digital domain. The analog gain steps between -12 dB and +12 dB are in 1 dB steps. Half dB steps between those points are done in the digital PGA. Gain steps between 12 dB and 20 dB are all done in the digital domain. (for example, 18 dB gain = 12 dB analog + 6 dB Digital). The gain structure in the PCM1865-Q1 is shown below.

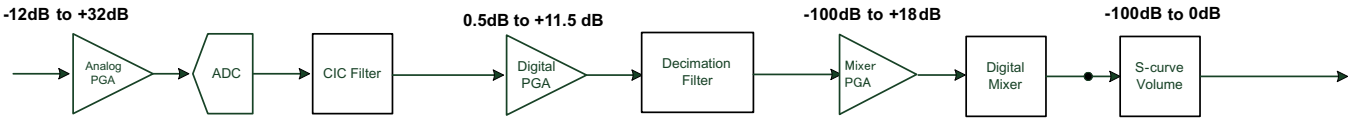

Figure 23. PCM1865-Q1 Complete Gain Structure (PGAs and Attenuator)

The analog gain steps within the analog PGA are shown below. Again, from -12 dB to +12 dB, the steps are 1 dB each. The digital PGA has granularity down to 0.5 dB.

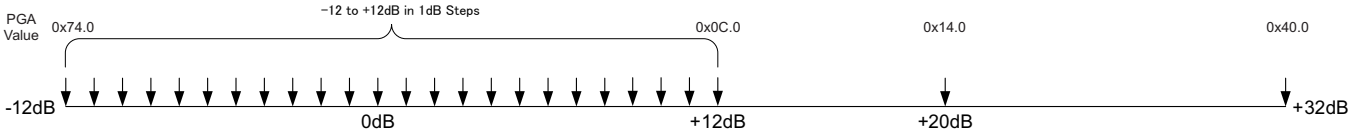

Figure 24. Analog Gain Steps with PCM1865-Q1 Software Programmable Devices

The PGA in the PCM1865-Q1 is a hybrid analog and digital programmable gain amplifier. The devices integrate a lookup table with the optimal gain balance between analog and digital gain, allowing the gain to be set in a single register per channel. For example, set 18dB Gain, and the system will allocate 12dB to the analog PGA and 6dB to the digital.

The PGA is a zero crossing detect type, and has the ability to set target gain, and have the device work towards it (with a timeout if there is no zero crossing). Any changes in the Analog PGA and Digital PGA are designed to step towards the final level. However, any changes in the Mixer PGA are immediate. Care should be taken when changing gain levels in the digital mixer PGA. Alternatively, multiple writes can be made of small enough values that will not cause significant pops/clicks.

For example, Current level 0dB, set target as 3.5 dB – PGA increases gain in 0.5dB steps towards 3.5dB.

The Auto Gain Mapping function can by bypassed if required, using Manual Gain Mapping. Manual Gain Mapping is particularly useful when using digital microphones, as the PDM input signal bypasses the analog PGA and must be amplified using the digital PGA. (**PGA_MODE Register(Page.0, 0x19)**

NOTE

Using the device with a differential inputs increases the full scale voltage to 4.2VRMS (that's 2.1VRMS per pin, out of phase).

10.8 Automatic Clipping Suppression

The PCM1865-Q1 software controlled devices have the ability to automatically lower the gain in 0.5 dB steps under the following conditions if the ADC is clipping.

The device detects clipping after the decimation filter in the signal chain (shown in Figure 25), and counts the number of successive clips before responding.

The device can also generate an internal interrupt that can be mapped to a GPIO or interrupt pin, allowing the system microcontroller to make the decision to increase the gain and consider the clipping an isolated event, or make the decision that the new gain setting is appropriate.

Copyright © 2014, Texas Instruments Incorporated

Automatic Clipping Suppression (continued)

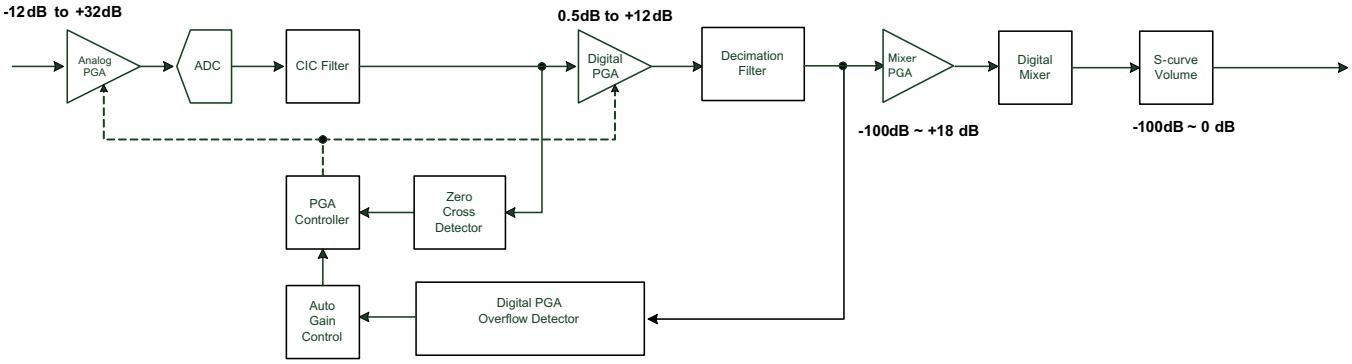

Figure 25. Sampling points within the PCM1865-Q1 for Auto Clipping Suppression

Maximum Attenuation Level

This feature is not designed to be a complete analog gain control. This feature was defined to avoid clipping, and to inform the system microcontroller of a clipping event, to allow the microcontroller (or the end user) to decide if the gain should be increased again.

The maximum attenuation is programmable to be -3 / -4 / -5 / -6 dB.

Channel Linking

Depending on the application, users may not want to link input channels, however, for the majority of Stereo input applications, its strongly recommended to set the system to track gain across inputs, to maintain balance.

The Auto PGA Clipping Suppression Control has the following settings:

Table 4. Auto Clipping Suppression Control Registers

Register Name	Register Location	Usage	Values
AGC_EN	Pg0 0x05	Enable Auto Gain Control.	0: Disable (Default) 1: Enable
CLIP_NUM[1:0]	Pg0 0x05	Start auto gain control after detects CLIP_NUM times of ADC sample clips	0: 80 1: 40 2: 20 3: 10 (Default)
MAX_ATT[1:0]	Pg0 0x05	Maximum automatic attenuation	0: -3dB (Default) 1: -4dB 2: -5dB 3: -6dB
DPGA_CLIP_EN	Pg0 0x05	Enable Clipping detection after the digital PGA. Note, digital PGA is post ADC, meaning that there will be a short delay before clipping is detected.	0: Disable (Default) 1: Enable
LINK	Pg0 0x05	Link all channels together. Should be linked if dealing with stereo sources to maintain balance.	0: Independent control (Default) 1: Ch1[R]/Ch2[L]/Ch2[R] follow Ch1[L] PGA value.
SMOOTH	Pg0 0x05	Enable Smooth transition from step to step. (zero crossing)	0: Immediate Change 1: Smooth Change (Default)

Copyright © 2014, Texas Instruments Incorporated

10.9 Zero Crossing Detect

The PCM1865-Q1 uses a zero crossing detector to make gain changes only when the incoming signal crosses its halfway point between negative and positive swing, reducing "zipper noise".

There are two sources for the controller, the output of the ADC Modulator and the output from the digital PGA. The Analog PGA is sampled at 4× the audio sampling rate to detect the zero crossing. The digital PGA is sampled at a similar rate.

The process for changing gain in the PCM1865-Q1 is as follows:

1. Detect a zero crossing of the oversampled analog input channel.
2. Increment or Decrement the gain toward the target PGA value step by 0.5dB.
3. Repeat from (1) until arrival at the target PGA value.
4. If zero crossing does not occur for 8192 sample times (= time out), change the gain per sample.

This process does not require intervention by the user. This data serves as information only.

10.10 Digital Inputs

10.10.1 Stereo PCM Sources

The PCM1865-Q1 can support Stereo PCM data on GPIO pins so that I^2S sources, such as wireless modules can have their data mixed with the incoming analog content. The clock rate of the incoming data (known as DIN) must be synchronous with the PCM1865-Q1 software programmable device main clocks. There is no integrated sample rate converter on-chip. The DIN signal can be received on GPIO0,1,2,3. configured on **GPIO_FUNC_X (Page.0 0x10 and 0x11)**. The incoming data is then driven to the digital mixer running on DSP2.

The audio format can be configured separately from the output serial port using register **RX_TDM_OFFSET (P0, 0x0E).**

Inputs can be mixed and volume-controlled before routing to a digital amplifier. Typical uses could be the connection to a *Bluetooth* module. The mixing and crossfading could be done all in the PCM1865-Q1, rather than a hard switch in external logic. The on-chip PLL can also help create the system master clock (SCKOUT) for poorly designed I^2S *Bluetooth* modules that don't provide an system clock to drive the system DACs.

Copyright © 2014, Texas Instruments Incorporated

Digital Inputs (continued)

10.10.2 Digital PDM Microphones

Up to four digital microphones are supported on the PCM1865-Q1, using a shared output clock (configured from GPIO2) and two data lines, GPIO0 or GPIO1.

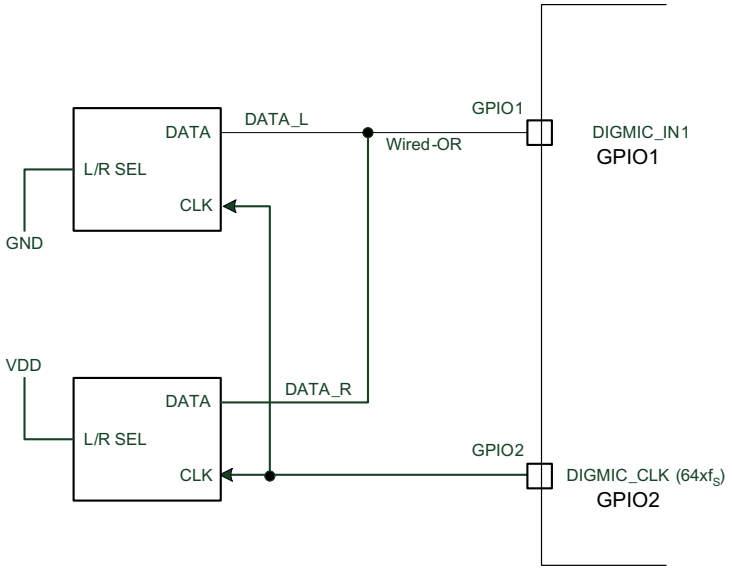

Figure 26. Digital Microphone Example Connection

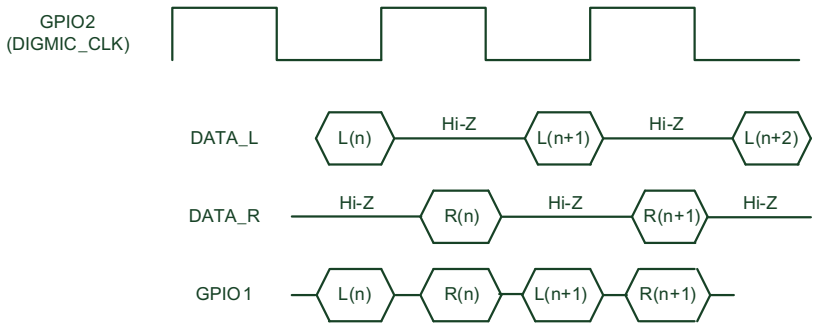

Figure 27. Digital Microphone Protocol

Supported Digital Microphone clock frequency is as follows, and the frequency depends on required operating sampling frequency as follows:

- 2.0480 MHz (32 kHz × 64)
- 2.8224 MHz (44.1 kHz × 64)
- 3.072 MHz (48 kHz × 64)
- 3.072 MHz (96 kHz × 32)

The recommended operating conditions for the Digital MIC to get good performance are:

- Sampling frequency is 32 kHz or 44.1 kHz
- SCK is 256 × f_S.
- Enable Auto Clock Detector (Default)

Copyright © 2014, Texas Instruments Incorporated

10.11 Clocks

10.11.1 Description

The PCM1865-Q1 has an extremely flexible clocking architecture. All converters require a Master Clock (typically a 2^n power of the sampling rate, known as MCK), a bit clock (BCK) which is used to clock the data bit by bit out of the device (typically running at 64-f_S - to allow up to 32 bits per channel output) and finally a Wordclock/Left-Right Clock (LRCK) that is used to set the exact sampling point for the ADC.

The PCM1865-Q1 can be a clock master (where BCK and LRCK can be internally divided from a provided master clock) or can be a clock slave, where all clocks (MCK, BCK and LRCK) must be provided by an external source.

Unlike many competing devices, the PCM1865-Q1 can source its master clock from two different sources, either an external crystal, or a CMOS level (3.3 V or 1.8 V) clock, eliminating the usual external crystal oscillator circuit required to source a CMOS clock signal.

The PCM1865-Q1 also differentiates itself by integrating an on-chip Phase Locked Loop (PLL) that can generate real audio-rate clocks from any clock source between 1 MHz and 50 MHz. Software Controlled devices, such as the PCM1865-Q1 can have their PLL programmed to generate audio clocks based on any incoming clock rate. For example, a 12-MHz clock in the system can be used to generate clocks for a 44.1 kHz system.

10.11.2 External Clock-Source Limits

The 3 different clock sources for the device each have some limits in terms of their input circuitry. These limits are separate from the internal PLL capability.

Table 5. External Clock-Source Limitations and notes

Clock Source	Limits	Notes
XTAL	15 MHz → 35 MHz	
3.3 V CMOS MCLK	1 MHz → 50 MHz	Should be input to SCKI pin. 3.3 V CMOS can be input, even when IOVDD is 1.8 V
1.8 V CMOS MCLK	1 MHz → 50 MHz	Should be input to XI pin.

Copyright © 2014, Texas Instruments Incorporated

10.11.3 Device Clock Distribution and Generation

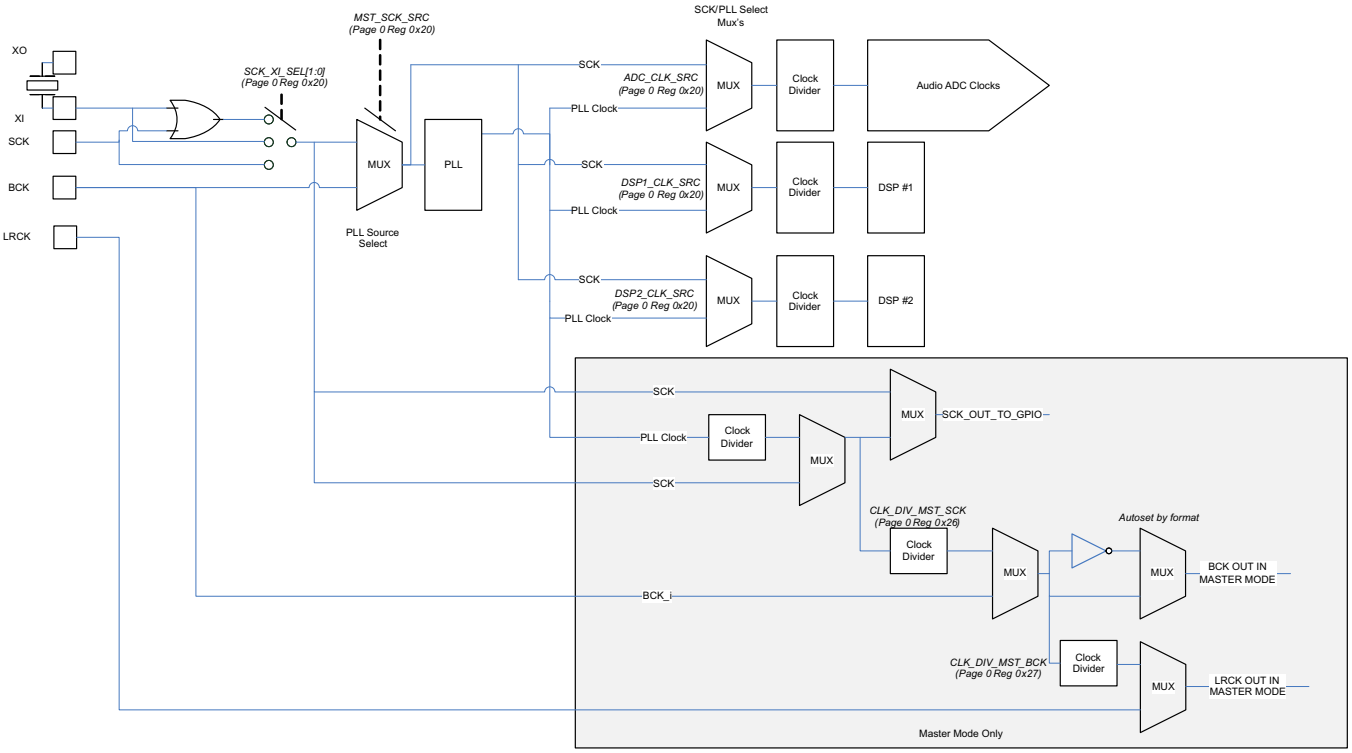

Figure 28. PCM1865-Q1 Main Audio Clock Tree and Clock Generation

PLLs are used in all modes to generate the clocks required to run both fixed-function DSPs. The dividers are automatically configured based on the clock rate detection. The clock architecture above allows non-audio clock sources to be used as clock sources and the PCM1865-Q1 to continue to run in a Master mode, providing all PCM/I^2S Clocks for other converters in the system.

10.11.4 PCM1865-Q1 Clocking Modes

There are four different clocking modes available on the device which can take advantage of the onboard PLL and clock detection. Advanced clock detection and a smart internal state engine in the PCM1865-Q1 can automatically configure the various dividers in the device (shown in *Device Clock Distribution and Generation*) with optimized values. Automatic clock configuration is enabled by default, using the register **CLKDET_EN (Page.0, 0x20)**.

NAME	Device	External XTAL/MCK INPUT	BCK, LRCK Direction	PLL Configuration
ADC Master Mode	PCM1865-Q1	YES	OUT	Not Required
ADC Slave Mode	PCM1865-Q1	YES	IN	Not Required
ADC Slave PLL Mode	PCM1865-Q1	NO	IN	Automatic for standard audio rates
ADC Non-Audio MCK	PCM1865-Q1	YES	OUT	Manual

Copyright © 2014, Texas Instruments Incorporated

10.11.4.1 PCM1865-Q1 Clock Configuration and selection

The PCM1865-Q1 offers both Master and Slave functionality. In master mode, a source master clock (of 256, 384 or 512× the sampling rate) can be sourced from either an external crystal (XI/XO) or on an incoming SCK. (see *External Clock-Source Limits* for input rate limitations on SCK sources) The clock from XI and SCK are OR'd internally, allowing either to be used.

The device can generate the other I^2S clocks (BCK and LRCK) in master mode (with dividers set in MD0 and MD1) or be a clock slave to MCK,BCK and LRCK. In this scenario, the device auto-detects the clock divider ratio.

In master mode, BCK per LRCK is fixed at 64. This allows up to 32 bits per channel.

Selection of the appropriate master/slave and clock ratio between MCK and f_S can be done using MD0 and MD1.

Table 6 shows the suggested master clock rates for each of the sample rates supported.

Table 6. External Master Clock Rate versus Sampling Frequency

SAMPLING RATE FREQUENCY	SYSTEM CLOCK FREQUENCY (MHz)		
(kHz)	$256f_S$	$384f_S$	$512f_S$
8.0	2.048	3.072	4.096
16.0	4.096	6.144	8.192
32.0	8.1920	12.2880	16.3840
44.1	11.2896	16.9344	22.5792
48.0	12.2880	18.4320	24.5760
64.0	16.3840	24.5760	32.7680
88.2	22.5792	33.8688	45.1584
96.0	24.5760	36.8640	49.1520
176.4	45.1584		
192.0	49.1520		

For slave mode, BCK per LRCK should be set to 64.

10.11.4.2 Clock Sources (PCM1865-Q1 Software Programmable Devices)

The PCM1865-Q1 devices support a wide range of options for generating the clocks required to operate the ADC section, as well as interface and other control blocks as shown in Figure 29.

The clocks for the PLL require a source reference clock. This clock source can be configured on software devices as the XTAL, SCK or BCK.

The PCM1865-Q1 software programmable devices share a similar clock tree for the generation and distribution of clocks Figure 28.

CLK_MODE (Page.0 0x20) is used to configure the clock configuration. Bits [5:7] configure the OR and MUX for the incoming MCLK.

Register **MST_MODE (Page.0 0x20)** is used to set the device in Master or Slave Mode. Bits [1:3] set clock sources for the ADC, DSP1 and DSP2. These can mostly be ignored for the most common applications, but are provided for advanced users.

The **CLKDET_EN (Page.0, 0x20)** register bit (Auto Clock Detector) is important; the clock detector is mainly functional for slave modes, and for master modes where the master clock is a 256/384/512× multiple of the incoming data rate.

NOTE

Non audio related master clock sources can be used with the PCM1865-Q1 software programmable devices providing the PLL is programmed manually. CLKDET_EN should be set to 0.

The result of configurations can be checked by reading registers **FS_INFO / CURRENT_BCK_RATIO (Page.0 0x73 and 0x74)**.

Copyright © 2014, Texas Instruments Incorporated

Table 7. PLL Configuration Registers

CLOCK MULTIPLEXER	FUNCTION	BITS
MST_SCK_SRC	PLL Reference	Page 0, Register 0x20
DIVIDER	**FUNCTION**	**BITS**
CLK_DIV_PLL_SCK	Clock Divider of PLL to emulate SCK	Pg0, Reg 0x25, b[0:6]
CLK_DIV_MST_SCK	Master Mode SCK to SCKOUT Ratio	Pg0, Reg 0x26, b[0:6]
CLK_DIV_MST_BCK	Master Mode SCK to BCK Ratio	Pg0, Reg 0x27, b[0:6]

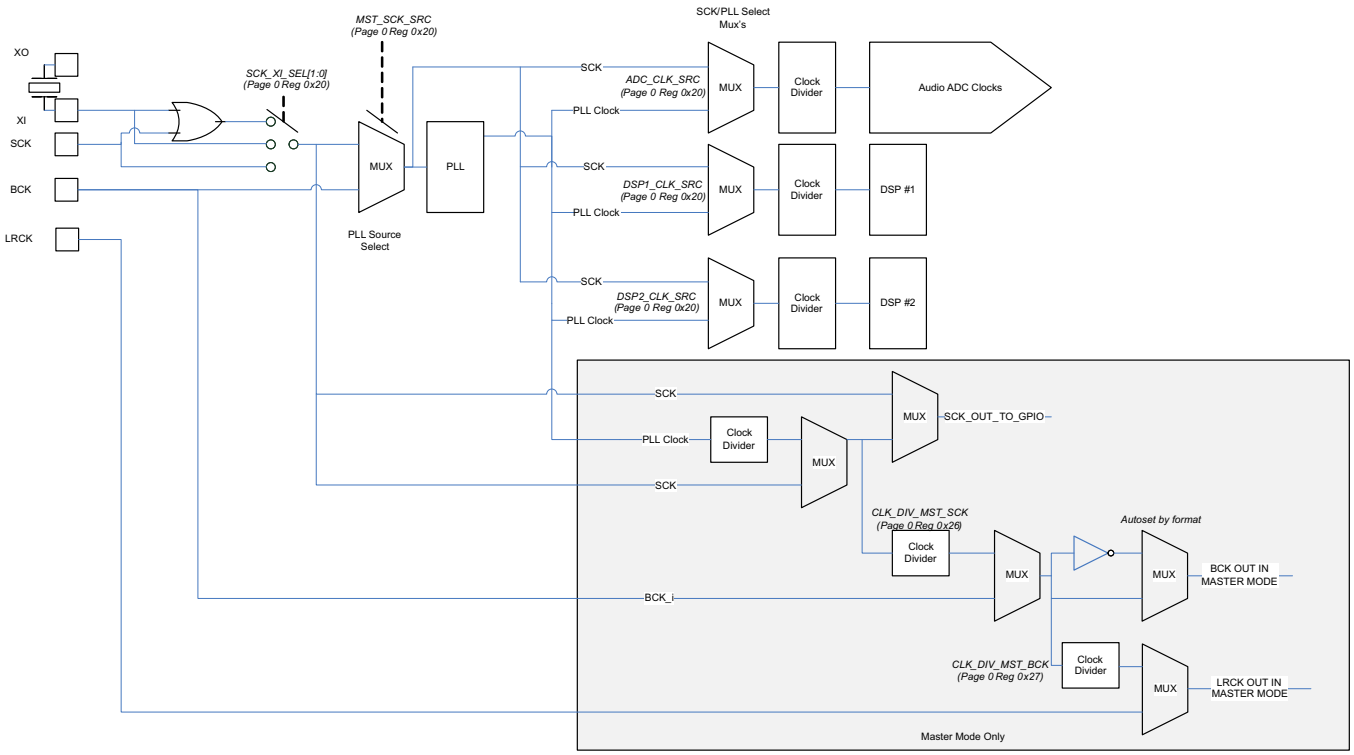

Figure 29. PLL Clock Source and Clock Distribution

10.11.4.3 PCM1865-Q1 Software Programmable Device Clocking Configuration and Selection

10.11.4.3.1 Configuration of Master Mode

If an external, high quality MCLK is available (either on the SCK pin or XTAL), then the PCM1865-Q1 should be configured to run in Master Mode where possible, with the ADC and serial ports being driven from the MCLK/SCK source. The on-chip DSPs will continue to require clocks from the PLL, as they run from a much higher clock rate.

Clock MUXs and overall configuration can be done in register Page0, 0x20. For the best performance in master mode, where possible, the automatic clock configuration circuitry will configure the clocks as shown in , depending on if the device is a PCM1865-Q1 software programmable device. The tables below show data at 48kHz multiples, the ratios for multiples of 44.1kHz are identical, while the absolute MHz values will be multiples of 44.1kHz instead of 48kHz.

This automatic configuration can be bypassed using registers, starting from **CLKDET_EN (Page.0, 0x20).**

Copyright © 2014, Texas Instruments Incorporated

Table 8. Clock Divider and Source Control with External SCK

f_S	SCK Ratio	SCK Frequency (MHz)	PLL Ratio	PLL Frequency (MHz)	PLL Configuration	DSP1 Clock (MHz)	DSP1 Clock		DSP 2 Clock (MHz)	DSP2 Clock		ADC Clock (MHz)	ADC Clock	
							Source	Divider		Source	Divider		Source	Divider
8 kHz	128	1.024	12288	98.304	P=0,R=1, J=48, D=0	2.048	PLL	48	2.048	PLL	48	1.024	PLL	96
	256	2.048	12288	98.304	P=0,R=1, J=24, D=0	2.048	SCK	1	2.048	SCK	1	1.024	SCK	2
	384	3.072	12288	98.304	P=0,R=1, J=16, D=0	2.048	SCK	1	2.048	SCK	1	1.024	SCK	3
	512	4.096		off		2.048	SCK	2	2.048	SCK	2	1.024	SCK	4
	768	6.144		off		3.072	SCK	2	3.072	SCK	2	1.024	SCK	6
16 kHz	128	2.048	6144	98.304	P=0,R=1, J=24, D=0	4.096	PLL	24	4.096	PLL	24	2.048	PLL	48
	256	4.096	6144	98.304	P=0,R=1, J=12, D=0	4.096	SCK	1	4.096	SCK	1	2.048	SCK	2
	384	6.144	6144	98.304	P=0,R=1, J=8, D=0	6.144	SCK	1	6.144	SCK	1	2.048	SCK	3
	512	8.192		off		4.096	SCK	2	4.096	SCK	2	2.048	SCK	4
	768	12.288		off		6.144	SCK	2	6.144	SCK	2	2.048	SCK	6
48 kHz	128	6.144	2048	98.304	P=0,R=1, J=8, D=0	12.288	PLL	8	12.288	PLL	8	6.144	PLL	16
	256	12.288	2048	98.304	P=1,R=1, J=8, D=0	12.288	SCK	1	12.288	SCK	1	6.144	SCK	2
	384	18.432	2048	98.304	P=2,R=1, J=8, D=0	18.432	SCK	1	18.432	SCK	1	6.144	SCK	3
	512	24.576		off		12.288	SCK	2	12.288	SCK	2	6.144	SCK	4
	768	36.864		off		18.432	SCK	2	18.432	SCK	2	6.144	SCK	6
96 kHz	128	12.288	1024	98.304	P=3,R=1, J=16, D=0	24.756	PLL	4	24.756	PLL	4	6.144	SCK	2
	256	24.576	1024	98.304	P=7,R=1, J=16, D=0	24.756	SCK	1	24.756	SCK	1	6.144	SCK	4
	384	36.864	1024	98.304	P=11,R=1, J=16, D=0	24.756	SCK	1	24.756	SCK	1	6.144	SCK	6
	512	49.152		off		24.756	SCK	2	24.756	SCK	2	6.144	SCK	8
192 kHz	128	24.576	512	98.304	P=3,R=1, J=8, D=0	49.152	PLL	2	49.152	PLL	2	6.144	SCK	4
	256	49.152	512	98.304	P=7,R=1, J=8, D=0	49.152	SCK	1	49.152	SCK	1	6.144	SCK	8

Copyright © 2014, Texas Instruments Incorporated

10.11.4.4 PCM1865-Q1 BCK Input Slave PLL Mode

The PCM1865-Q1 software programmable devices can generate an internal MCLK system clock using it's PLL (referenced from an external input BCK) in slave mode. BCK must be 64f_S. Supported sampling frequencies are listed in Table 9. Whilst the PCM1865-Q1 can support down to 8 kHz, analog performance is not tested at this rate.

Table 9. Auto PLL BCK Requirements

Sampling Frequency	BCK Ratio to LRCK	BCK Frequency
8 kHz	256	2.048
16 kHz	64	1.024
	256	4.096
48 kHz	32	1.536
	48	2.304
	64	3.072
	256	12.288
96 kHz	32	3.072
	48	4.608
	64	6.144
	256	24.576
192 kHz	32	6.144
	48	9.216
	64	12.288
	256	49.152

In software SPI/I^2C mode, a PCM1865-Q1 software programmable device can use its on-chip crystal oscillator, if a CMOS clock source is not available. Audio Clocks can be generated through the PLL from the non-audio standard CMOS/Crystal frequency (and then can be divided down as described above). This function is not available in hardware mode.

8 kHz is only supported if an external MCK is provided. The Autodetect and PLL system support frequencies as low as 32 kHz. Analog performance is not tested in this mode.

The clock tree can also be programmed manually, with the settings shown in Table 10.

f_S	BCK Ratio	BCK Freq. (MHz)	PLL Ratio	PLL Frequency (MHz)	PLL Configuration	DSP1 Clock (MHz) 2CH	DSP1 Clock Divider 2 CH Mode		DSP 2 Clock (MHz)	DSP2 Clock Divider		ADC Clock (MHz)	ADC Clock Divider	
							Source	Divider		Source	Divider		Source	Divider
8 kHz	256	2.048	12288	98.304	P=0,R=1, J=24, D=0	2.048	PLL	48	2.048	PLL	48	1.024	PLL	96
16 kHz	64	1.024	6144	98.304	P=0,R=1, J=48, D=0	4.096	PLL	24	4.096	PLL	24	2.048	PLL	48
	256	4.096	6144	98.304	P=1,R=1, J=24, D=0	4.096	PLL	24	4.096	PLL	24	2.048	PLL	48
48 kHz	32	1.536	2048	98.304	P=0,R=1, J=32, D=0	12.288	PLL	8	12.288	PLL	8	6.144	PLL	16
	48	2.304	2048	92.16	P=0,R=1, J=20, D=0	15.36	PLL	6	15.36	PLL	6	6.144	PLL	15
	64	3.072	2048	98.304	P=0,R=1, J=16, D=0	12.288	PLL	8	12.288	PLL	8	6.144	PLL	16
	256	12.288	2048	98.304	P=3,R=1, J=16, D=0	12.288	PLL	8	12.288	PLL	8	6.144	PLL	16
96 kHz	32	3.072	1024	98.304	P=0,R=1, J=16, D=0	24.576	PLL	4	24.576	PLL	4	6.144	PLL	16

Copyright © 2014, Texas Instruments Incorporated

f_S	BCK Ratio	BCK Freq. (MHz)	PLL Ratio	PLL Frequency (MHz)	PLL Configuration	DSP1 Clock (MHz) 2CH	DSP1 Clock Divider 2 CH Mode		DSP 2 Clock (MHz)	DSP2 Clock Divider		ADC Clock (MHz)	ADC Clock Divider	
							Source	Divider		Source	Divider		Source	Divider
	48	4.608	1024	98.304	P=2,R=1, J=32, D=0	24.576	PLL	4	24.576	PLL	4	6.144	PLL	16
	64	6.144	1024	98.304	P=1,R=1, J=16, D=0	24.576	PLL	4	24.576	PLL	4	6.144	PLL	16
	256	24.576	1024	98.304	P=7,R=1, J=16, D=0	24.576	PLL	4	24.576	PLL	4	6.144	PLL	16
192 kHz	32	6.144	512	98.304	P=1,R=1, J=16, D=0	49.152	PLL	2	49.152	PLL	2	6.144	PLL	16
	48	9.216	512	98.304	P=2,R=1, J=16, D=0	49.152	PLL	2	49.152	PLL	2	6.144	PLL	16
	64	12.288	512	98.304	P=3,R=1, J=16, D=0	49.152	PLL	2	49.152	PLL	2	6.144	PLL	16
	256	49.152	512	98.304	P=15,R=1, J=16, D=0	49.152	PLL	2	49.152	PLL	2	6.144	PLL	16

Table 10. PCM1865-Q1 (4-Channel) PLL BCK Settings

f_S	BCK Ratio	BCK Freq. (MHz)	PLL Ratio	PLL Frequency (MHz)	PLL Configuration	DSP1 Clock (MHz) 4ch	DSP1 Clock Divider 4 CH Mode		DSP1 Clock (MHz) 2CH	DSP2 Clock Divider		ADC Clock (MHz)	ADC Clock Divider	
							Source	Divider		Source	Divider		Source	Divider
8 kHz	256	2.048	12288	98.304	P=0,R=1, J=24, D=0	4.096	PLL	24	2.048	PLL	48	1.024	PLL	96
16 kHz	64	1.024	6144	98.304	P=0,R=1, J=48, D=0	8.192	PLL	12	4.096	PLL	24	2.048	PLL	48
	256	4.096	6144	98.304	P=1,R=1, J=24, D=0	8.192	PLL	12	4.096	PLL	24	2.048	PLL	48
48 kHz	32	1.536	2048	98.304	P=0,R=1, J=32, D=0	24.576	PLL	4	12.288	PLL	8	6.144	PLL	16
	48	2.304	2048	92.16	P=0,R=1, J=20, D=0	30.72	PLL	3	15.36	PLL	6	6.144	PLL	15
	64	3.072	2048	98.304	P=0,R=1, J=16, D=0	24.576	PLL	4	12.288	PLL	8	6.144	PLL	16
	256	12.288	2048	98.304	P=3,R=1, J=16, D=0	24.576	PLL	4	12.288	PLL	8	6.144	PLL	16
96 kHz	32	3.072	1024	98.304	P=0,R=1, J=16, D=0	49.152	PLL	2	24.576	PLL	4	6.144	PLL	16
	48	4.608	1024	98.304	P=2,R=1, J=32, D=0	49.152	PLL	2	24.576	PLL	4	6.144	PLL	16
	64	6.144	1024	98.304	P=1,R=1, J=16, D=0	49.152	PLL	2	24.576	PLL	4	6.144	PLL	16
	256	24.576	1024	98.304	P=7,R=1, J=16, D=0	49.152	PLL	2	24.576	PLL	4	6.144	PLL	16
192 kHz	32	6.144	512	98.304	P=1,R=1, J=16, D=0	98.304	PLL	1	49.152	PLL	2	6.144	PLL	16
	48	9.216	512	98.304	P=2,R=1, J=16, D=0	98.304	PLL	1	49.152	PLL	2	6.144	PLL	16
	64	12.288	512	98.304	P=3,R=1, J=16, D=0	98.304	PLL	1	49.152	PLL	2	6.144	PLL	16
	256	49.152	512	98.304	P=15,R=1, J=16, D=0	98.304	PLL	1	49.152	PLL	2	6.144	PLL	16

Copyright © 2014, Texas Instruments Incorporated

10.11.4.5 PCM1865-Q1 Software Programmable Devices ADC Non-Audio MCK PLL Mode

This mode is mainly used for systems driving TDM ports or systems where the MCK is not related to the audio sampling rate. Examples may be where the Audio ADC needs to share a clock source with the central processor. (This is commonly 12 MHz, 24 MHz or 27 MHz.)

Under these conditions, the automatic configuration register **CLKDET_EN (Page 0, 0x20)** should be set to 0, and the PLL manually configured, using registers **(Page 0, 0x28 - 0x2D)**. See *PCM1865-Q1 Software Programmable Devices Manual PLL Calculation*.

10.11.5 PCM1865-Q1 Software Programmable Devices Manual PLL Calculation

The PCM1865-Q1 has an on-chip PLL with fractional multiplication to generate the clock frequency required by the audio ADC, Modulator and Digital Signal Processing blocks. The programmability of the PLL allows operation from a wide variety of clocks that may be available in the system. The PLL input supports clocks varying from 1MHz to 50MHz and is register programmable to enable generation of required sampling rates with fine precision.

The PLL by default is enabled because the on-chip fixed function DSPs require high clock rates to complete all various decimation, mixing and level-detection functions. The PLL output clock PLLCK is given by Equation 1: PLL Rate Calculation:

$$PLLCK = \frac{PLLCKIN \times R \times J.D}{P} \text{ or } PLLCK = \frac{PLLCKIN \times R \times K}{P} \quad (1)$$

R = 1, 2, 3, 4, ….. 15, 16
J = 1, 2, 3, 4,...63, and D = 0000, 0001, 0002...9999
K = J.D
P = 1, 2, 3...15

R, J, D, and P are register programmable. J is the integer portion of K (the numbers to the left of the decimal point), while D is the fractional portion of K (the numbers to the right of the decimal point, assuming four digits of precision).

Examples:

If K = 8.5, then J = 8, D = 5000
If K = 7.12, then J = 7, D = 1200
If K = 14.03, then J = 14, D = 0300
If K = 6.0004, then J = 6, D = 0004

When the PLL is enabled and D = 0000, *the following conditions must be satisfied:*

1 MHz = (PLLCKIN / P) = 20 MHz
64 MHz < (PLLCK IN × K × R / P) < 100 MHz
1 = J = 63

When the PLL is enabled and D /= 0000, *the following conditions must be satisfied:*

6.667MHz = PLLCLK _IN / P = 20 MHz
64MHz < (PLLCK IN x K x R / P) < 100 MHz
4 = J = 11
R = 1

When the PLL is enabled,

$f_S$ref = (PLLCLK_IN × K × R) / (N × P) :
N is selected so that $f_S$ref × N = PLLCLK_IN × K × R / P is in the allowable range.

Example:

MCLK = 12 MHz and $f_S$ref = 44.1 kHz, (N=2048)
Select P = 1, R = 1, K = 7.5264, which results in J = 7, D = 5264

Example:

MCLK = 12 MHz and $f_S$ref = 48.0 kHz, (N=2048)
Select P = 1, R = 1, K = 8.192, which results in J = 8, D = 1920

Copyright © 2014, Texas Instruments Incorporated

The PLL can be programmed via Page 0, Registers 20 thru 24. The PLL can be turned on via Page 0, Register 4, D(0). The variable P can be programmed via Page 0, Register 20, D(3:0). The variable R can be programmed via Page 0, Register 24, D(3:0). The variable J can be programmed via Page 0, Register 21, D(5:0). The variable D is 14-bits and is programmed into two registers. The MSB portion can be programmed via Page 0, Register 22, D(5:0), and the LSB portion is programmed via Page 0, Register 23, D(7:0). The variable D is set when the LSB portion is programmed.

Values are programmed in the registers in Table 11.

Table 11. PLL Coefficient Registers

Register	FUNCTION	BITS
PLL_EN	PLL enable, Lock Status and PLL Reference	Page 0, Register 0x28
PLL_P	PLL P	Page 0, Register 0x29
PLL_J	PLL J	Page 0, Register 0x2B
PLL_Dx	PLL D	Page 0, Register 0x2C (least significant bits)
		Page 0, Register 0x2D (most significant bits)
PLL_R	PLL R	Page 0, Register 0x2A

10.11.6 Clock Halt and Error

The PCM1865-Q1 has a clock error detection block inside that continues to monitor the ratio of BCK to LRCK.

If a clock error is detected - such as an unexpected number of BCKs per LRCK, then the device will go into Standby mode, and an interrupt can be configured (software programmable devices) to inform the host.

Should all clocks be stopped going into the device, then the device will shift into Sleep state and begin Energysense Signal Detect Mode.

The status of the halt and error detector can be read from register: **CLK_ERR_STAT (Page.0, 0x75).**

10.12 ADCs

10.12.1 Main Audio ADCs

The main ADCs in the PCM1865-Q1 are 110dB, 40 kHz bandwidth ADCs that are tightly coupled to dedicated PGAs and input multiplexers. Often in this document, references are made to ADC1L and ADC1R (or CH1_L and CH1_R), the main Left/Right ADCs present in PCM1865-Q1. References to ADC2L and ADC2R are the other pair of L/R ADCs also present.

10.12.2 Secondary ADC - Energysense and Analog Control

The PCM1865-Q1 has a secondary ADC which is used for signal level detection or DC level change detection.

Copyright © 2014, Texas Instruments Incorporated

ADCs (continued)

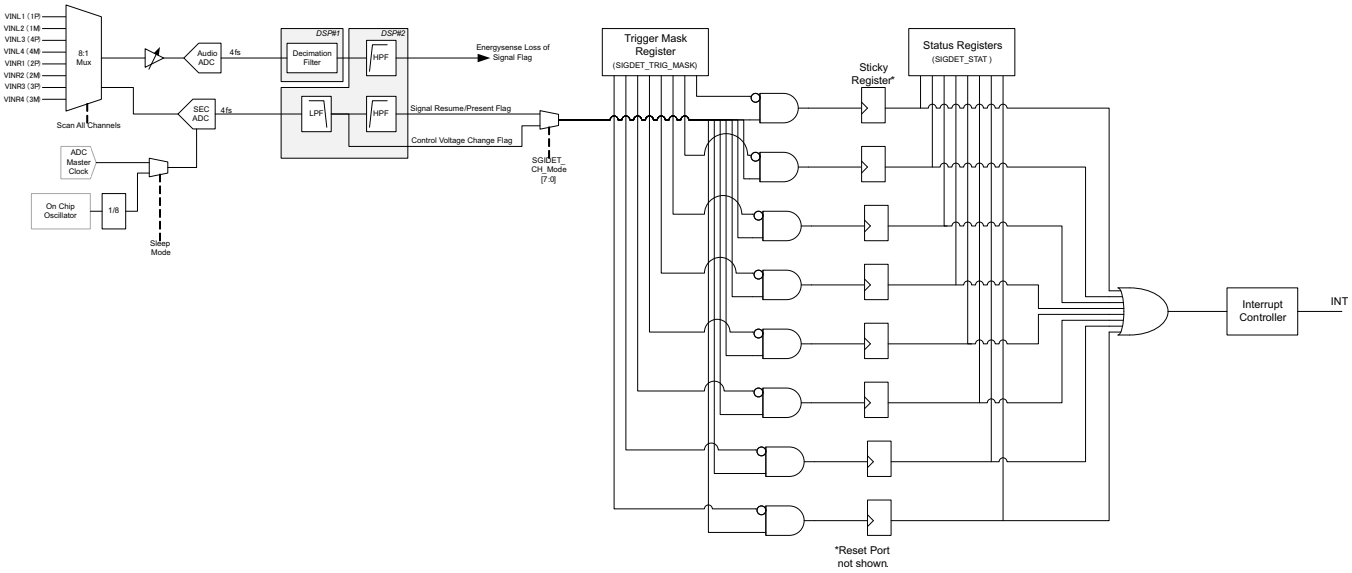

Figure 30. Secondary ADC Architecture

The secondary ADC has two main purposes in the PCM1865-Q1. The primary purpose is to act as a low power signal detection system, to aid with system wakeup from sleep. TI calls this functionality "Energysense". Other functionality includes the ability to use any spare analog inputs as "generic" ADC inputs, for connection to simple analog sources, such as voltages from control potentiometers. TI calls this functionality "Controlsense".

The secondary ADC is a one-bit delta-sigma type ADC. The sampling rate is directly connected to the main ADC audio sampling clocks during ACTIVE functionality. When the device is in SLEEP state, then the secondary ADC will switch clock source to an on-chip oscillator. (If there are no other clock sources.)

In sleep mode, the inputs are all treated as single ended inputs. Differential inputs are not supported in this mode, as the PGA would need to be powered up, which would consume more power.

To make the secondary ADC as flexible as possible in both Energysense and Controlsense modes, the following controls and coefficients are available in the register map. More details on each are in the relevant following sections.

- Coefficients for the Low Pass Filter
- Coefficients for the High Pass Filter
- Reference Voltage and Interrupt Voltage Delta for each input in Controlsense mode
- Signal Loss Conditions (Time and Threshold)
- Signal Resume Conditions (Time and Threshold)
- Interrupt behavior (Ping every X ms if host does not clear, for example.)
- Scan time for each single ended input.

10.12.2.1 Secondary ADC Analog Input Range

To match the dynamic range of the secondary ADC to an incoming line level signal, an overall attenuation is applied to the incoming signal. This attenuation is also present in Controlsense mode. The impact of this is that the secondary ADC in Controlsense mode can only detect control signals up to 1.65 V. Control signals should be appropriately attenuated external to the PCM1865-Q1. This could be easily done by putting a resistor of the same value as a control potentiometer in series.

10.12.2.2 Frequency Response of the Secondary ADC

The natural response of the secondary ADC is not flat by frequency. However, the frequency response can be flattened, so that all frequencies are equally sensitive to the energystar detector by modifying the LPF/HPF biquads in the DSP.

Copyright © 2014, Texas Instruments Incorporated

ADCs (continued)

An example of the code required is shown in Table 13.

10.12.3 Secondary ADC DC Level Change Detection

This function is used for external analog controls, such as potentiometers to set volume, tone control, or a sensor.

There are two parameters for the DC level change detection. Reference level (REF_LEVEL) and Difference level (DIFF_LEVEL). Each input pin (input 1 through 8) has a different reference and difference level.

Users set a reference point, and a difference point. If the voltage at the control point crosses the difference point then an interrupt is driven from the device. This is useful for filtering out noise, as well as reducing the load on the host processor for controls that tend to be "set and forget" (such as volume).

The data from the secondary ADC can also be streamed out of the device in TDM form and directly from the I^2C register map. **AUXADC_DATA_CTRL (Page.0 0x58)** is used to configure and check the status of the DC detector.

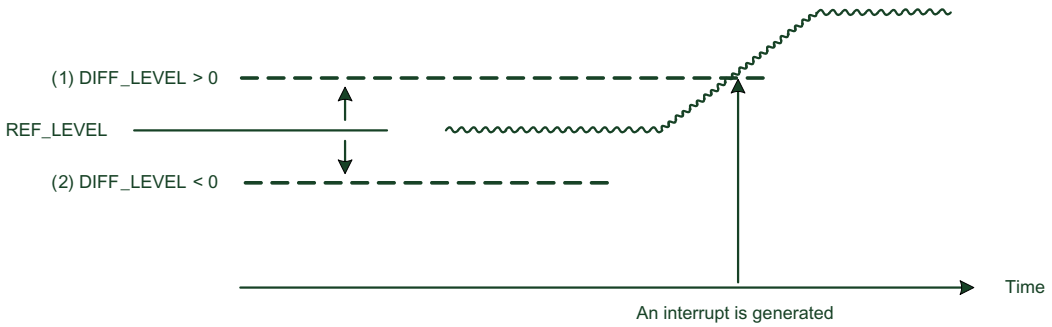

Figure 31. DC Detection function

10.13 Energysense

Energysense functionality has been added to the PCM1865-Q1 to aid with auto-sleep and auto-wakeup for audio systems that are expected to be sold within the European Union. The latest EcoDesign legislation in Europe has demanded that products consume less than 500 mW in standby. Most off-the-shelf external power adaptors can consume 300mW when idling, leaving the system with only 200 mW available. In many systems that requires that almost everything be powered down in sleep mode, to be powered back up when signal enterers the system again.

Energysense is split into two functions: Signal Loss Flag and Signal Resume Flag. Both are available on the PCM1865-Q1 software controlled devices. Usage is shown below. By default, the Signal Resume Threshold is set at –57 dBFS.

Table 12. Energysense States

MODE	PURPOSE	CONDITIONS	POSITIVE OUTCOME	WORST CASE
SLEEP (Signal Detect Mode)	Detect Input Signal and Wake up from SLEEP	BCK and LRCK stopped (not locked) or Register Set.	Host Wakes and services interrupt (reads register)	Host Doesn't respond or start clocks.
		Trigger Interrupt when input crosses above (threshold)	Host Starts BCK/LRCK. (Moving system to ACTIVE mode) or writes to register.	PCM1865-Q1 keeps triggering interrupts until host responds.
		Trigger for 1ms every X seconds until clocks start (x=1 by default)		
ACTIVE (Signal Loss Mode)	Detect content below (threshold) over time	BCK and LRCK are currently running	System can choose to go to sleep or not. If not, reset interrupt	If system does not sleep, remain in Mode 2, and prompt every Y.
	Assist system to sleep after audio inactivity (for example, Source is off, but speaker still on)	If no content above -(threshold) dB for Y minutes, drive interrupt.	If System decides to sleep, stop BCK/LRCK. This will move PCM1865-Q1 to SLEEP mode.	MCU will need to mask that interrupt.

Copyright © 2014, Texas Instruments Incorporated

10.13.1 Energysense Signal Loss Flag

The main ADC constantly monitors the input signal level while in ACTIVE mode. Should the input level remain below a register defined threshold (for example –60dB) for a register defined amount of time (for example 1 minute), an interrupt will be generated.

Should the system MCU decide to move to SLEEP mode, the PCM1865-Q1 can be moved to SLEEP by stopping BCK/LRCK or using a register. See Table 12 for detail. If BCK and LRCK are stopped by the Host after the interrupt, the device goes to the sleep state as shown in Figure 32. Otherwise, the device repeats the interrupt every Y minutes as shown in Figure 33. The interrupt can be cleared by reading the status register.

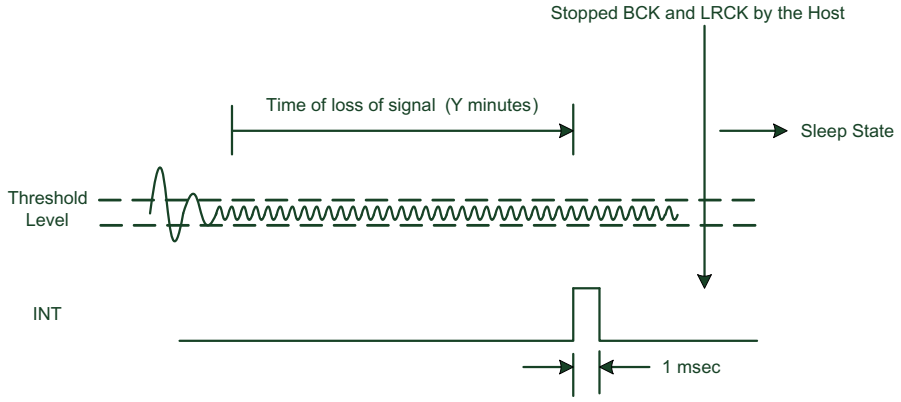

Figure 32. Energysense Signal Loss

In a typical application, the host MCU will note and reset this register multiple times until a system sleep number is hit. For example, a 5-minute signal loss could be implemented by using the default 1-minute timeout on the PCM1865-Q1, and counting 5 interrupts. An example can be seen in the diagram below.

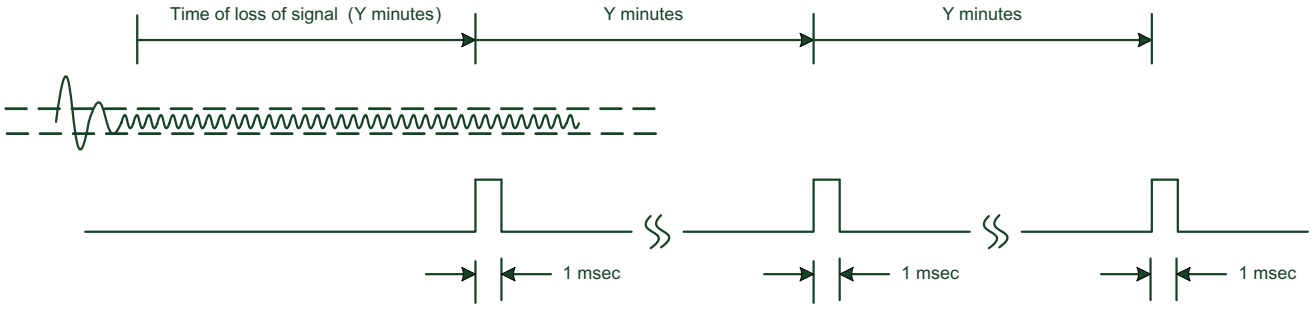

Figure 33. Interrupt Behavior for Signal Loss.

Alternatively, the **SIGDET_LOSS_TIME (Page.0, 0x34)** register in the device can be changed from 1 minute (Default) to 5 minutes.

The duration of the interrupt can also be modified using **INT_PLS (Page.0 0x62)** to be pulses or to be a sticky flag until cleared.

10.13.2 Energysense Signal Detect Circuitry

In SLEEP mode (BCK and LRCK stop, or by register), the PCM1865-Q1 monitors the signal level or DC level change using the secondary ADC. All 8 channels are converted one after the other in a circular manner. The scan time can be specified with a register SIGDET_SCAN_TIME. All 8 channels will be measured, even if some have their interrupt outputs muted. Accuracy and frequency response are a function of scan time. A long scan time allows detection of lower frequency content.

Copyright © 2014, Texas Instruments Incorporated

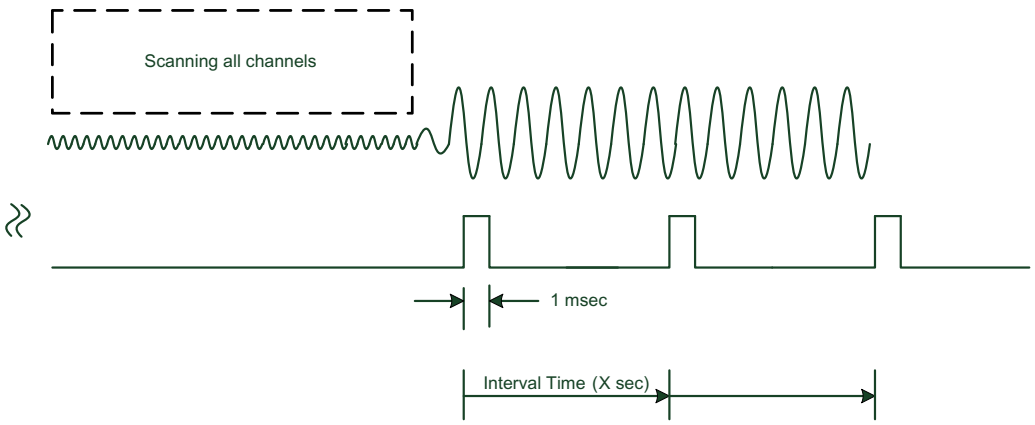

Figure 34. Energysense Signal Wakeup Logic

There is a balance between lowest frequency detectable, and time on that particular channel. There are three options in register **SIGDET_INT_INTVL (Page.0 0x36):**

- 50 Hz detect (160 ms per channel)
- 100 Hz detect (80 ms per channel)
- 200 Hz detect (40 ms per channel)

10.13.2.1 Energysense Threshold Levels for both Signal Loss and Signal Detect

There are two threshold levels used for Energysense. One is the loss of signal level, another one is the resume of signal level.

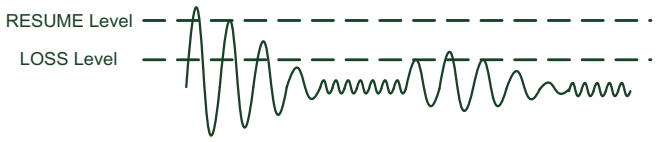

Figure 35. Dual Thresholds for Energysense

As both thresholds are DSP based, their coefficients are stored in virtual coefficient space that is programmed through the device register map.

For example, to change the resume threshold value to –30dB (0x040C37):

Write 0x00 0x01 ; # change to register page 1

Write 0x02 0x2D ; # write the memory address of resume threshold

Write 0x04 0x04 ; # bit[23:15]

Write 0x05 0x0C ; # bit[15:8]

Write 0x06 0x37 ; # bit[7:0]

Write 0x01 0x01 ; # execute write operation

10.13.3 Programming Various Coefficients for Energysense

Programming the DSP coefficients for the Energysense secondary ADC is done through the indirect virtual programming registers in Page1. The Low Pass Filter (LPF) and High Pass filter (HPF) coefficients can be written to flatten out the frequency response, as well as the Energysense Loss and Resume thresholds. Visually, one can imagine the DSP flow as shown in Figure 36.

Copyright © 2014, Texas Instruments Incorporated

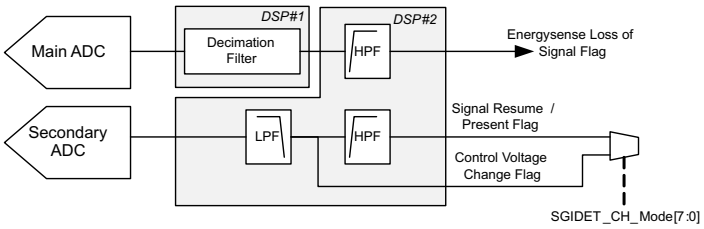

Figure 36. Energysense Process Flow

To flatten out the response of the secondary ADC, so that all frequencies are detected evenly, the following biquads should be written to the virtual DSP memory, using the techniques discussed in *Programming DSP Coefficients*.

Table 13. Secondary ADC Biquad Coefficients at 48kHz Sampling

Coefficient	Virtual RAM Address
LPF_B0:	0x20
LPF_B1:	0x21
LPF_B2:	0x22
LPF_A1:	0x23
LPF_A2:	0x24
HPF_B0:	0x25
HPF_B1:	0x26
HPF_B2:	0x27
HPF_A1:	0x28
HPF_A2:	0x29

10.14 Audio Processing

Both DSP1 and DSP2 are fixed function processors that are not custom-programmable. They are used in this device to perform multiple filtering and mixing functions. Programming the DSP coefficients is done indirectly using registers on Page1. The data and target DSP memory address are stored in registers, and once the DSPs are ready for the data (that is done by request) the data is then latched into the DSP memory.

This indirect method of programming the DSP allows multiple registers to be written, without consuming valuable register map space. More details can be found in the *Programming DSP Coefficients* section.

10.14.1 DSP1 Processing Features

10.14.1.1 Digital Decimation Filters

The decimation filter used to convert the high-data-rate modulator to I^2S rates is selectable between a Classic FIR response and a low-latency IIR response. A high pass filter is also available to remove any DC bias that may be present in the signal.

Details can be found in the **DSP_CTRL** register **(Page.0, 0x71)**.

10.14.1.2 Digital PGA Gain

As discussed in the *Programmable Gain Amplifier* section, the digital PGA gain can be controlled by the auto gain mapping function, that will use the analog gain settings in register **PGA_VAL_CH1_L (Page.0 0x01)** and related registers to achieve the target gain with a combination of digital and analog gain. However, digital gain can be also controlled directly by disabling the auto gain mapping function using register **PGA_CONTROL_MAPPING (Page.0 0x19)**.

Copyright © 2014, Texas Instruments Incorporated

Audio Processing (continued)

10.14.2 DSP2 Processing Features

10.14.2.1 Digital Mixing Function

This function allows post ADC mixing, as well as ADC + incoming I^2S mix. Volume control functionality can be performed prior to outputting the signal to an I^2S DAC or Amplifier.

Gain range is from –120 dB to + 18 dB (4.20 format). Phase Inversion can be done by performing the 2's compliment of the positive gain coefficient. 2's compliment can be performed by inverting all bits in the binary coefficient, and adding 1 to the LSB.

As the DSP coefficients are directly written, no soft ramping is available. Use of I^2S receive sacrifices 2 digital mic channels due to pin limitations.

Coefficients are written indirectly to virtual memory addresses using the registers on Page 1. Details of the registers are shown in the *Register Map* section.

A diagram of the digital mixing functionality is shown in Figure 37.

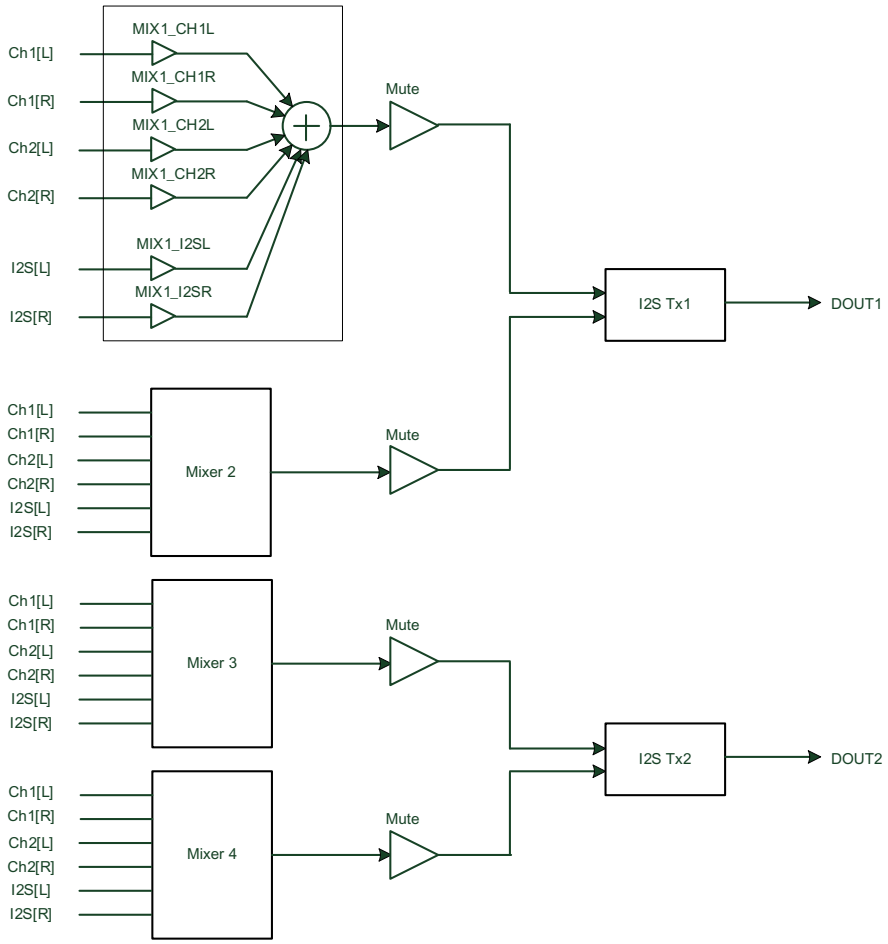

Figure 37. Digital Mixer Functionality

10.15 Fade-In and Fade-Out Functions

The PCM1865-Q1 has Fade-In and Fade-Out functions on DOUT to avoid pop noise. This function is engaged on device power up/down and mute/unmute. The level changes from 0 dB to mute or mute to 0 dB are performed using pseudo S-shaped characteristics calculation with zero cross detection. Because of the zero cross detection, the time needed for the Fade-In and Fade-Out depends upon the analog input frequency (f_{IN}). Fade takes 48 / f_{IN} until processing is completed. If there is no zero cross during 8192 / f_S, DOUT is faded in or out by force during 48/f_S (TIME OUT). Figure 38 illustrates the Fade-In and Fade-Out operation processing.

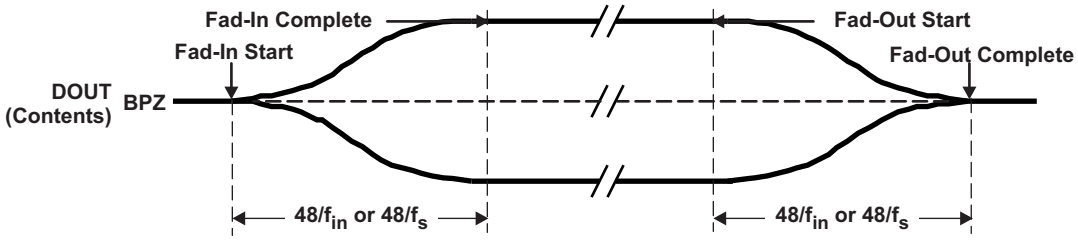

Figure 38. Fade-In and Fade-Out Operations

10.16 Mappable GPIO Pins

All the GPIO pins on thePCM1865-Q1 software programmable devices can be configured for various functions. They can each have their polarity inverted to make control of following circuits easier. See the control registers for each GPIO for a better explanation of mapping. (such as **GPIO1_FUNC at Page.0 0x10**)

The type of function can also be controlled, including such behavior as regular inputs, inputs with toggle detection, or sticky bits. The device can also be configured as an open drain output, so that multiple interrupt outputs from different devices in the system can be connected together.

10.17 Current Status Registers

Page.0, Registers 0x72 through 0x75 and 0x78 can be used to read the device status at any time. Sample Rate, Power Rail status, Clock Error and Clock Ratios can all be read from these registers.

10.18 Control

10.18.1 Hardware Control Configuration

PCM1865-Q1 devices require the following functions to be configured on startup. Hardware Programmable devices require a subset of these configurations.

1. Control Interface type and address for PCM1865-Q1 software programmable devices
2. The Clock Mode and Rate (Automatic in Slave Mode, or divider ratio in Master Mode) (For more details see the *Clocks* section.)
3. The Interface Audio Data Format
4. Digital Filter Selection (FIR or IIR) (requires a power cycle to change)
5. Analog Input Channels and PGA Gain

10.18.2 Software Controlled Device Configuration

PCM1865-Q1 software programmable devices are configured and controlled by using either I^2C or SPI using MD0.

Table 14. MD0 - Control Protocol Select

MD0	Control Protocol
Low (or floating)	I^2C Mode
High	SPI Mode

Copyright © 2014, Texas Instruments Incorporated

Table 15. MD1 - I²C Address or SPI Chip Select

Mode	MD1 Usage	Static MD1 Value	Configuration
I²C	Address pin	Low	I²C Address: 0x94
I²C	Address pin	High	I²C Address: 0x96
SPI	MS (SPI Chip Select)	N/A	N/A

10.18.3 SPI Interface

The SPI interface is a 4-wire synchronous serial port which operates asynchronously to the serial audio interface and the system clock (SCK). The serial control interface is used to program and read the on-chip mode registers.

The control interface includes MISO, MOSI , MC, and MS. MISO (Master In Slave Out) is the serial data output, used to read back the values of the mode registers; MOSI (Master Out Slave In) is the serial data input, used to program the mode registers.

MC is the serial bit clock, used to shift data in and out of the control port on the MC falling edge. MS is the active-low mode control enable, used to enable the internal mode register access. If data from the device is not required, the MISO pin can be assigned to GPIO1 by register control.

10.18.3.1 Register Read/Write Operation

All read/write operations for the serial control port use 16-bit data words. Figure 39 shows the control data word format. The most significant bit is the read/write (R/W) bit. For write operations, the bit must be set to 0. For read operations, the bit must be set to 1. There are seven bits, labeled IDX[6:0], that hold the register index (or address) for the read and write operations. The least significant eight bits, D[7:0], contain the data to be written to, or the data that was read from, the register specified by IDX[6:0].

Figure 40 and Figure 41 show the functional timing diagram for writing or reading through the serial control port. MS should be held at logic 1 state until a register needs to be written or read. To start the register write or read cycle, MS should be set to logic 0. Sixteen clocks are then provided on MC, corresponding to the 16 bits of the control data word on MOSI and readback data on MISO. After the eighth clock cycle has completed, the data from the indexed-mode control register appears on MISO during the read operation. After the sixteenth clock cycle has completed, the data is latched into the indexed-mode control register during the write operation. To write or read subsequent data, MS should be set to logic 1 once.

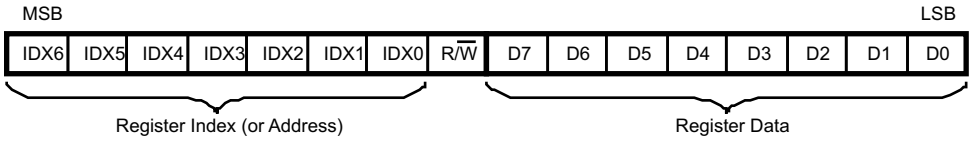

NOTE: B8 is used for selection of “Write” or “Read”. Setting = 0 indicates a “Write”, while = 1 indicates a ”Read”. Bits 15–9 are used for register address. Bits 7–0 are used for register data.

Figure 39. Control Data Word Format for MDI

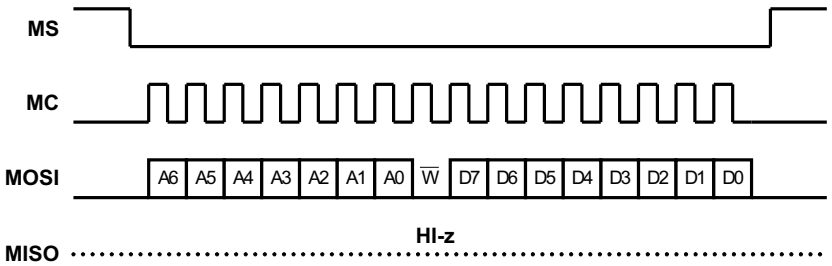

Figure 40. Serial Control Format for Write

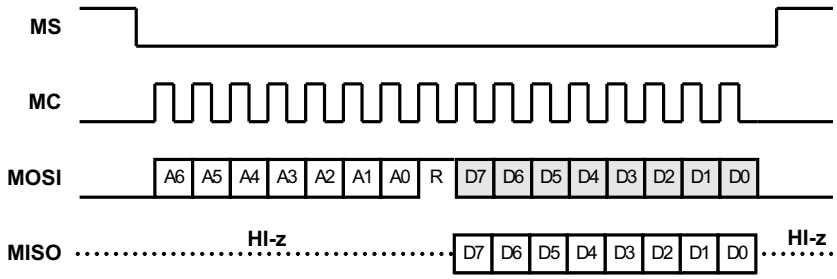

Figure 41. Serial Control Format for Read

Copyright © 2014, Texas Instruments Incorporated

10.18.4 I²C Interface

The PCM1865-Q1 software programmable devices support the I²C serial bus and the data transmission protocol for standard and fast mode as a slave device. This protocol is explained in I²C specification 2.0.

In I²C mode, the control pins are changed as follows:

Table 16. I²C Pins and Functions

PIN NAME	PIN NUMBER	PROPERTY	DESCRIPTION
SDA	15	Input / Output	I²C Data
SCL	16	Input	I²C Clock
AD	14	Input	I²C Address 1

10.18.4.1 Slave Address

Table 17. I²C Slave Address

MSB							LSB
1	0	0	1	0	1	AD	R/$\overline{W}$

The PCM1865-Q1 software programmable devices have a 7-bit slave address. The first six bits (MSBs) of the slave address are factory preset to 1001 01. The next bit of the address byte is the device select bit, which can be user-defined by the AD pin. A maximum of two PCM1865-Q1 devices can be connected on the same bus at one time. Each device responds when it receives its own slave address.

10.18.4.2 Packet Protocol

A master device must control packet protocol, which consists of start condition, slave address, read/write bit, data if write or acknowledge if read, and stop condition. The PCM1865-Q1 software programmable devices support only slave receivers and slave transmitters.

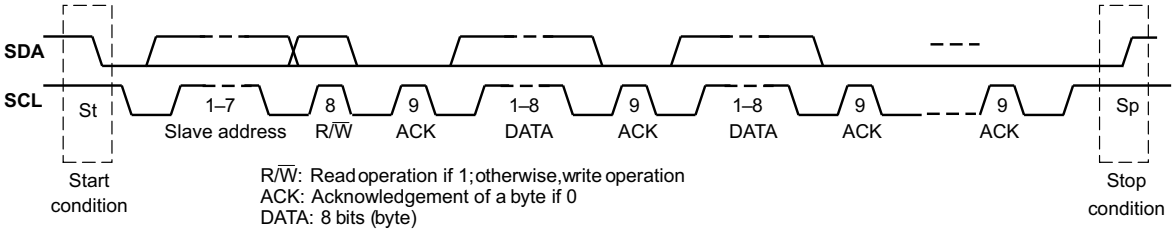

write operation

Transmitter	*M*	*M*	*M*	*S*	*M*	*S*	*M*	*S*		*S*	*M*
Data Type	St	slave address	R/$\overline{W}$	ACK	DATA	ACK	DATA	ACK	----------	ACK	Sp

read operation

Transmitter	*M*	*M*	*M*	*S*	*M*	*S*	*M*	*S*		*S*	*M*
Data Type	St	slave address	R/$\overline{W}$	ACK	DATA	ACK	DATA	ACK	----------	ACK	Sp

M: Master Device *S: Slave Device*
St: Start Condition Sp: Stop Conditiion

Figure 42. Basic I²C Framework

10.19 Interrupt Controller

The Software controlled devices have multiple signals that can be mapped to the interrupt outputs. These include:

- Energysense (DEFAULT)
- Secondary ADC Controlsense Interrupt

Copyright © 2014, Texas Instruments Incorporated

Interrupt Controller (continued)

- Clock Error
- DIN Toggle

The Interrupt controller has the following features

- The Interrupt sources can be filtered by the enable register (INT_EN).
- The Interrupt flags can be monitored by reading the status register (INT_STAT).
- The interrupt flags can be cleared by writing the status register.
- The polarity of the interrupt signal can be changed between active high, active low and Open Collector (High Impedance is pulled to GND) (INT_PLS).
- The pulse width of the interrupt signal can be changed between 1ms, 2ms, 3ms and Infinity (until the flag is cleared).

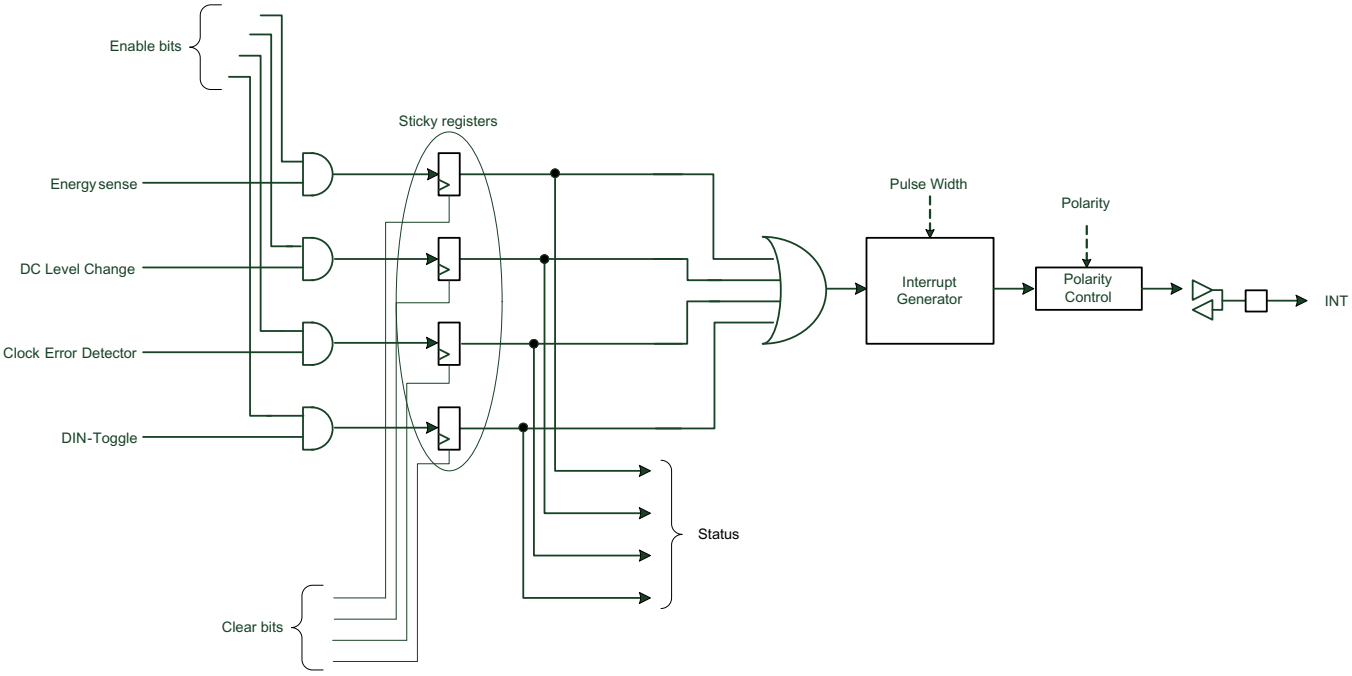

Figure 43. Interrupt Logic

Using a combination of these features, as well as the interrupt sources, allows the PCM1865-Q1 to alert a host microcontroller of an event, using whichever polarity signal required (Pull High, Pull Low, Hiz-Open Collector). The Host controller can then communicate with the device to poll the interrupt flag register to find out "what happened". Additional registers can then be read for more details. (For instance, which input triggered an Energysense event.)

10.19.1 Clock Error Detect

When a clock error occurs, the PCM1865-Q1 starts the following sequence:

1. Mute audio output immediately (without volume ramp down)
2. Generate an interrupt if the clock error interrupt is enabled
3. Wait until proper clock is supplied (Known as "Clock Waiting State")
4. Restart the clock detection. The PLL and all clock dividers are reconfigured with the result of the detection.
5. Start Fade-IN

The clock error status can be read in register **CLK_ERR_STAT (Page.0 0x20)**. The clock detection logic is shown below:

Copyright © 2014, Texas Instruments Incorporated

Interrupt Controller (continued)

Table 18. Summary of Clock Detection Logic

SCK	BCK	LRCK	Result	Action
ACTIVE	ACTIVE	ACTIVE	No Error	Normal Operation
ACTIVE	ACTIVE	HALT	Clock Error	Enter Clock Waiting State
ACTIVE	HALT	ACTIVE	Clock Error	Enter Clock Waiting State
ACTIVE	HALT	HALT	Clock Error	Enter SLEEP
HALT	ACTIVE	ACTIVE	No Error	Enter BCK PLL Mode
HALT	ACTIVE	HALT	Clock Error	Enter Clock Waiting State
HALT	HALT	ACTIVE	Clock Error	Enter Clock Waiting State
HALT	HALT	HALT	Clock Error	Enter SLEEP

In addition, the device uses an on-chip oscillator to detect errors in the rate of present clocks. That logic is shown below:

Table 19. Summary of Clock Error Logic

SCK/LRCK Ratio	BCK/LRCK Ratio	LRCK	Error Detect	Action
-	-	< 8kHz or > 192kHz	f_S error	Enter Clock Waiting State
Not 128 / 256 / 384 / 512 / 768	-	8 / 16 / 32 / 44.1 / 48 kHz	SCK error	Enter the clock waiting state, tie I^2S output to 0
Not 128 / 256 / 384 / 512	-	88.2 / 96kHz	SCK error	Enter the clock waiting state, tie I^2S output to 0
Not 128 / 256	-	176.4 / 192kHz	SCK error	Enter the clock waiting state, tie I^2S output to 0
	Not 256 / 64 / 48 / 32	8 / 16 / 32 / 44.1 / 48 / 88.2 / 96 / 174.6 / 196kHz	BCK error	Enter the clock waiting state, tie I^2S output to 0
		>192kHz	f_S error	Enter the clock waiting state, tie I^2S output to 0

In an application with a non-audio standard SCK coming into the product, the clock error detection on the SCK pin can be ignored by disabling the Auto Clock Detector **(CLKDET_EN Page.0 0x20)**.

Copyright © 2014, Texas Instruments Incorporated

10.20 Audio Format Selection and Timing Details

10.20.1 Audio Format Selection

On the PCM1865-Q1 software programmable devices, format selection is done with the registers in **I2S_FMT (Page.0 0x0B)**, which offers additional support for Right Justified "RJ" and Time Division Multiplexed data "TDM" for multiple channels.

The PCM1865-Q1 software programmable devices also offer an additional DOUT pin that can be driven through the GPIO pins. For example, see register details at **GPIO1_FUNC (Page.0 0x10).**

10.20.2 Serial Audio Interface Timing Details

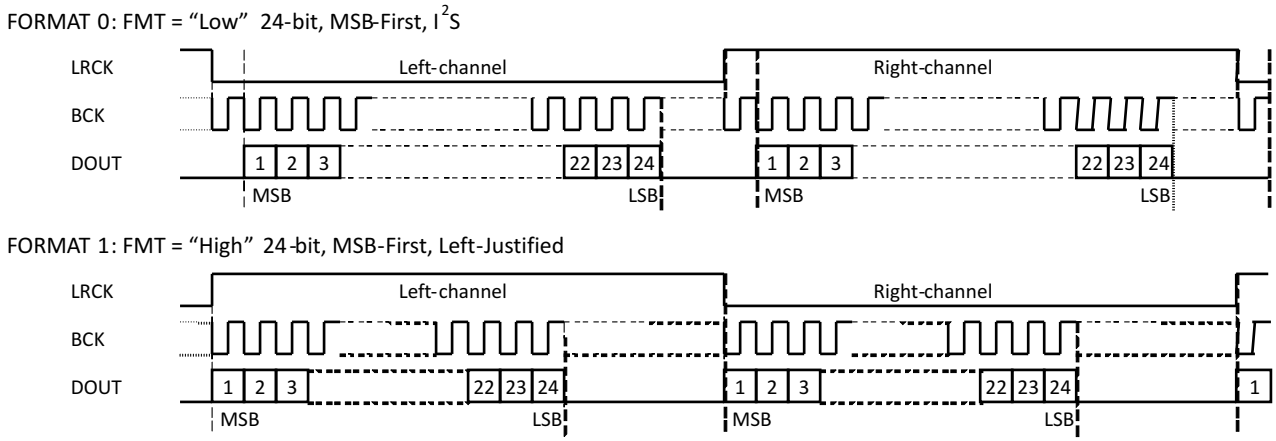

Figure 44. Audio Data Format
(LRCK and BCK work as inputs in slave mode and as outputs in master mode)

10.20.3 Digital Audio Output 2 Configuration

The PCM1865-Q1 software programmable devices offer an additional DOUT through the use of a GPIO that has its rate synchronized with the primary DOUT. DOUT2 is configured using the digital mixer, shown in *Digital Mixing Function*.

10.20.4 Decimation Filter Select

The PCM1865-Q1 offers a choice of two different digital filters, a Classic FIR response and a low latency IIR.

10.20.5 Serial Audio Data Interface

The PCM1865-Q1 devices interface to the audio system through LRCK, BCK and DOUT.

The PCM1865-Q1 software programmable devices are configured using register **I2S_FMT (Page.0 0x0B)**. **Register I2S_TX_OFFSET (Page.0 0x0D)** should be used when dealing with TDM systems to offset the data transmit.

In addition, the offset required for receiving 24-bit data can be programmed using **RX_TDM_OFFSET (P0, R0x0E).**

Copyright © 2014, Texas Instruments Incorporated

Audio Format Selection and Timing Details (continued)

10.20.5.1 Interface Timing

Figure 45 and Figure 46 illustrate the interface timing in slave mode, and Figure 47 shows master mode.

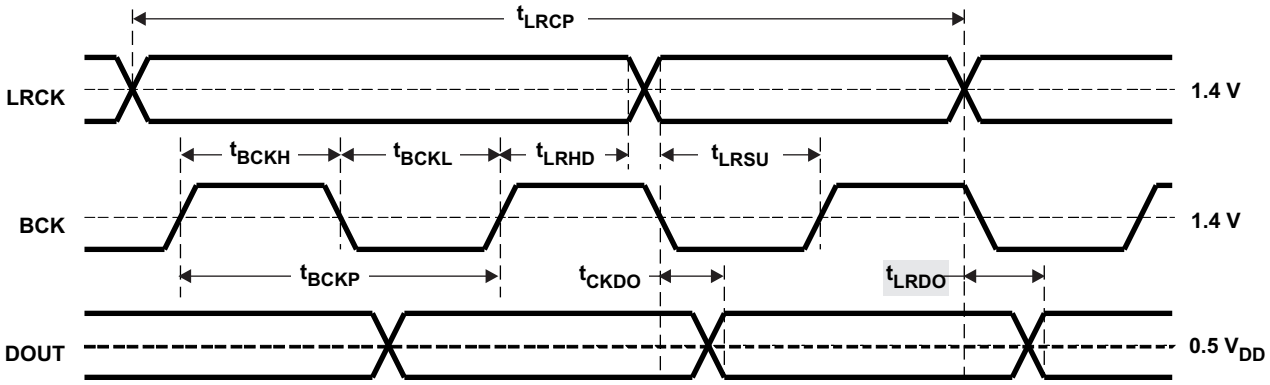

PARAMETER(1)		MIN	TYP	MAX	UNIT
t_{BCKP}	BCK Period	1/(64f_S)			ns
t_{BCKH}	BCK Pulse Width HIGH	1.5 × t_{SCKI}			ns
t_{BCKL}	BCK Pulse Width LOW	1.5 × t_{SCKI}			ns
t_{LRSU}	LRCK Set Up Time to BCK Rising Edge	50			ns
t_{LRHD}	LRCK Hold Time to BCK Rising Edge	10			ns
t_{LRCP}	LRCK Period	10			µs
t_{CKDO}	Delay time BCK Falling Edge to DOUT Valid	–10		40	ns
t_{LRDO}	Delay time LRCK Edge to DOUT Valid	–10		40	ns
t_R	Rise Time of All Signals			20	ns
t_F	Fall Time of All Signals			20	ns

(1) Timing measurement reference level is 1.4V for input and 0.5VDD for output. Rise and fall times are measured from 10% to 90% of the IN/OUT signals' swing. Load capacitance of DOUT is 20pF. t_{SCKI} means SCKI period.

Figure 45. Audio Data Interface Timing (Slave Mode: LRCK and BCK work as inputs)

Copyright © 2014, Texas Instruments Incorporated

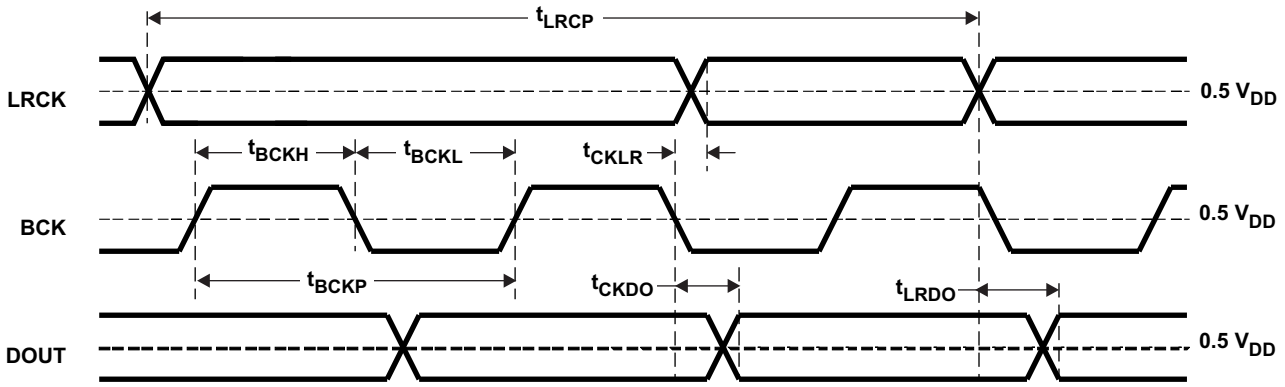

PARAMETER(1)		MIN	TYP	MAX	UNIT
t_{BCKP}	BCK Period	150	$1/(64f_S)$	2000	ns
t_{BCKH}	BCK Pulse Width HIGH	65		1000	ns
t_{BCKL}	BCK Pulse Width LOW	65		1000	ns
t_{CKLR}	Delay Time BCK Falling Edge to LRCK Valid	–10		20	ns
t_{LRCP}	LRCK Period	10	$1/f_S$	125	µs
t_{CKDO}	Delay time BCK Falling Edge to DOUT Valid	–10		20	ns
t_{LRDO}	Delay time LRCK Edge to DOUT Valid	–10		20	ns
t_R	Rise Time of All Signals			20	ns
t_F	Fall Time of All Signals			20	ns

(1) Timing measurement reference level is $0.5V_{DD}$. Rise and fall times are measured from 10% to 90% of the IN/OUT signals' swing. Load capacitance of all signals are 20pF.

Figure 46. Audio Data Interface Timing (Master Mode: LRCK and BCK work as outputs)

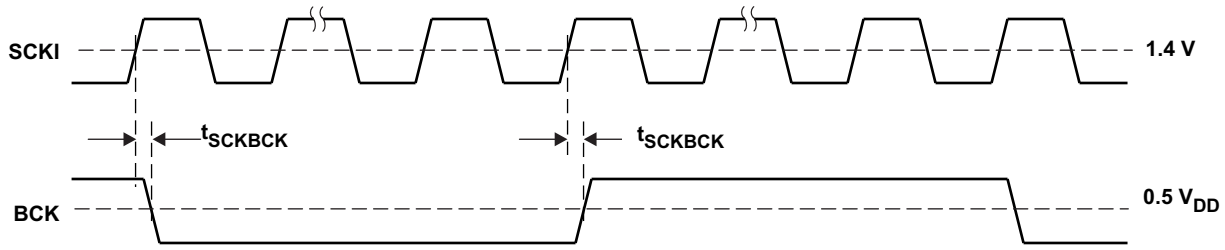

PARAMETER(1)		MIN	TYP	MAX	UNIT
t_{SCKBCK}	Delay Time SCKI Rising Edge to BCK Edge	5		30	ns

(1) Timing measurement reference level is 1.4V for input and 0.5 V_{DD} for output. Load capacitance of BCK is 20pF. This timing is applied when SCKI frequency is less than 25MHz.

Figure 47. Audio Data Interface Timing (Master Mode: BCK works as outputs)

Copyright © 2014, Texas Instruments Incorporated

11 Application and Implementation

NOTE

Information in the following applications sections is not part of the TI component specification, and TI does not warrant its accuracy or completeness. TI's customers are responsible for determining suitability of components for their purposes. Customers should validate and test their design implementation to confirm system functionality.

The PCM1865-Q1 is extremely flexible, and this flexibility gives rise to a number of design questions that define the design requirements for a given application.

11.1 Application Information

In this section, the design choices are described, followed by a typical system implementation. The simplified application diagrams below show a typical system that would require the following architecture decisions to be made.

- *Device Control Method*
  - Software Control (PCM1865-Q1)
    - SPI
    - I^2C
- *Power Supply Options*
  - Single supply
  - Separate analog and digital supplies
  - Separate IO supply
- *Master Clock Source*
  - External CMOS-level clock
  - External crystal with integrated oscillator
- *Analog Input Configuration*
  - Single-ended
  - Differential

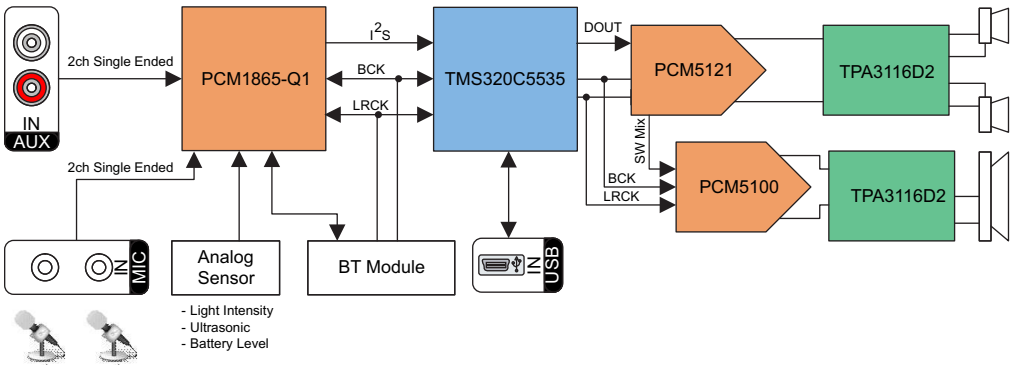

Figure 48. Example Application Diagram

11.1.1 Device Control Method

11.1.1.1 Software Control

11.1.1.1.1 SPI Control

SPI control is selected by the MD0 pin; in this case, MDO connects to 3.3V, so that the device acts as an SPI slave.

Application Information (continued)

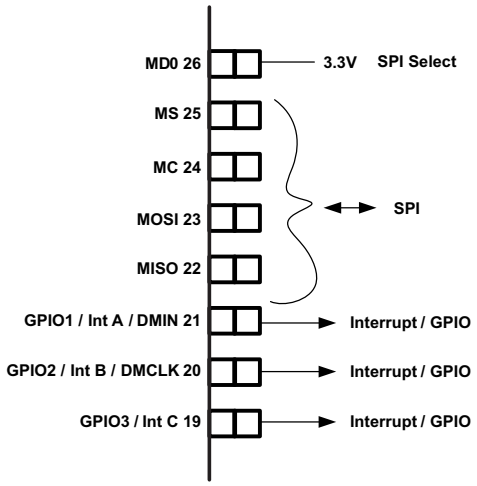

Figure 49. SPI Control Interface Including Interrupt Signals

11.1.1.1.2 I²C Control

I²C control is selected by the MD0 pin; in this example, MDO is pulled down to ground, so that the device acts as an I²C slave. One address line is supported to select between two devices on the same bus.

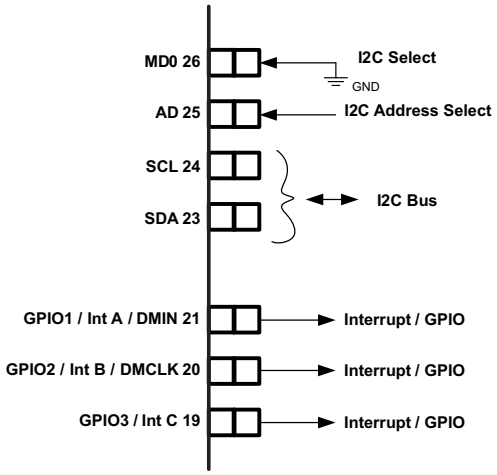

Figure 50. I²C Control Interface Including Interrupt Signals

11.1.2 Power Supply Options

11.1.2.1 3.3 V AVDD, DVDD and IOVDD

3.3 V AVDD, DVDD and IOVDD is the most typical power supply configuration.

Copyright © 2014, Texas Instruments Incorporated

Application Information (continued)

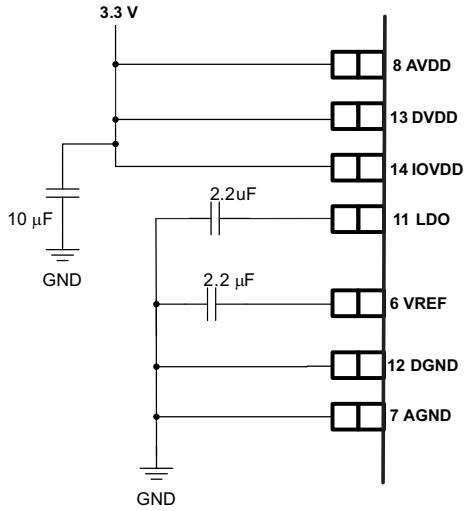

Figure 51. Single 3.3 V Supply

11.1.2.2 3.3V AVDD, DVDD, and 1.8V IOVDD

For details regarding lower power applications, see *3.3V AVDD, DVDD with a 1.8V IOVDD* for lower power applications.

11.1.3 Master Clock Source

The PCM1865-Q1 offers 3 different clock sources. For the highest performance, run the ADC in master mode from a stable, well-known SCK source, such as a CMOS SCK, or a external crystal (XTAL). The PCM1865-Q1 is easy to hook up to a crystal, simply connect to XI and XO, and add capacitors to ground, as suggested in the XTAL manufacturer's data sheet (typically 15 pF).

External CMOS clock sources can be brought directly into the SCKI pin (for 3.3 V sources) or into the XI pin (1.8 V sources).

If you have a clock source that is unrelated to the audio rate, then the PLL will need to be enabled. For instance, a 12 MHz USB crystal will require custom PLL settings to generate the 48 kHz rate clocks and the 44.1 kHz rate clocks required by many audio systems. An example with a 12-MHz clock is shown in *PCM1865-Q1 Software Programmable Devices Manual PLL Calculation*.

11.1.4 Analog Input Configuration

11.1.4.1 Analog Front-End Circuit For Single-Ended Line-In Applications

Most systems can simply use an input filter similar to Figure 52. However, for systems with significant out of band noise, a simple filter such as that shown in Figure 53 can be used for pre-ADC anti-aliasing filtering. The recommended resistor value is 100 Ω. Film-type capacitors of 0.01 µF should be located as close as possible to the VINLx and VINRx pins and should be terminated to GND as close as possible to the AGND pin to maximize the dynamic performance of the ADC.

Figure 52. Analog Input Circuit for Single Ended Input Applications

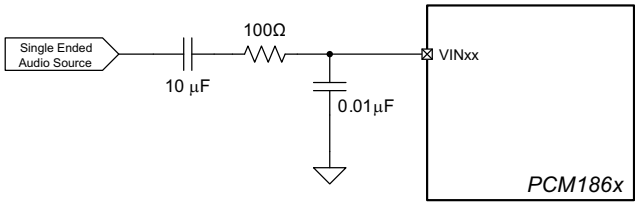

Figure 53. Analog Input Circuit with Additional Anti Aliasing Filter for Single-Ended Applications

Application Information (continued)

11.1.4.2 Analog Front-End Circuit Differential Line In Applications

As in single-ended applications, most systems can simply use an input filter similar to Figure 54. However, for systems with significant out of band noise, a simple filter such as that shown in Figure 55 can be used for pre-ADC anti-aliasing filtering. The recommended R value is 47 Ω. Film-type capacitors of 0.01 µF should be located as close as possible to the VINLx and VINRx pins and should be terminated to GND as close as possible to the AGND pin to maximize the dynamic performance of ADC. To maintain common mode rejection, the series resistors should be matched as closely as possible.

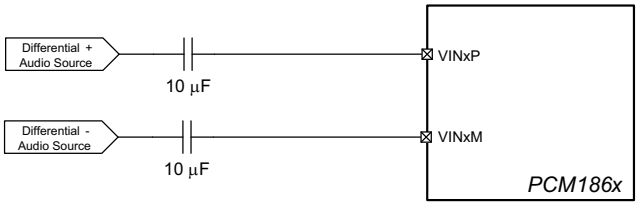

Figure 54. Analog Input Circuit for Differential Input Applications

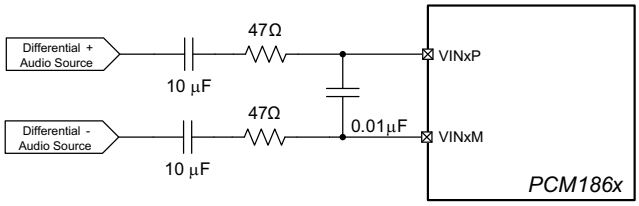

Figure 55. Differential Input Circuit with Additional Anti Aliasing Filter for Single Ended Applications

11.2 Typical Application

Copyright © 2014, Texas Instruments Incorporated

12 Power Supply Recommendations

12.1 Power Supply Distribution and Requirements

The PCM1865-Q1 has the following pins used for powering the device.

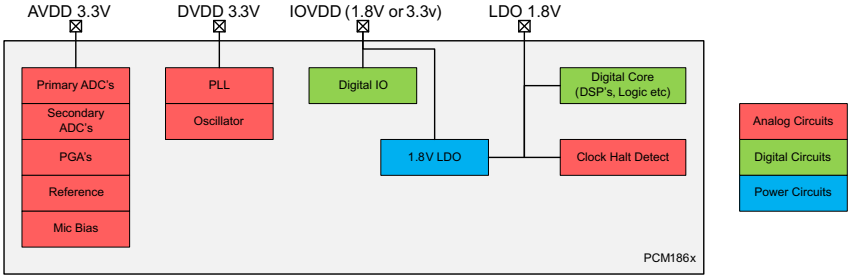

Figure 56. PCM1865-Q1 Power Distribution Tree

The PCM1865-Q1 uses a combination of 3.3 V functional blocks and 1.8 V functional blocks to achieve high analog performance, combined with high levels of digital integration. As such, the device has 3 internal power rails. AVDD provides the analog circuits with a clean 3.3V rail. DVDD is used for 3.3 V digital clock circuits. Externally, AVDD and DVDD can be connected together without significant impact to performance.

The PCM1865-Q1 integrates an on-chip LDO to convert an external 3.3 V to 1.8 V required by the digital core. The LDO input is derived from the IOVDD.

Table 20. Power Supply Pin Descriptions

NAME	USAGE / DESCRIPTION
AVDD	Analog Voltage Supply - should be 3.3 V. Powers the ADC, PGA, Reference, and Secondary ADC
DVDD	Digital Voltage Supply - should be 3.3 V. Used for the PLL and the Oscillator Circuit
IOVDD	Input/Output Pin Voltage. Also used as a source for the internal LDO for the digital circuit.
LDO	Output from the on-chip LDO. Should be used with a 0.1uF decoupling capacitor. Can be driven (used as power input) with a 1.8 V supply to bypass the on-chip LDO for lower power consumption.
AGND	Analog ground
DGND	Digital ground

12.2 1.8V Support

All PCM1865-Q1 devices can support external devices with 1.8 V IO. This is configured by driving IOVDD with 1.8 V.

12.3 Power Up Sequence

The Power up sequence consists of the following steps

1. Power On Reset
   (a) Power-up AVDD, DVDD and IOVDD
   (b) Check if LDO is being driven with an external 1.8 V, or is an output. Enable LDO if required.
   (c) Release Digital Reset
2. Wait Until Analog Voltage Reference is stable
3. Configure Clock
4. Fade-IN Audio ADC Content

12.4 Lowest Power Down Modes

To achieve the lowest levels of power down and sleep current, the following recommended write sequences are suggested on PCM1865-Q1 software programmable devices:

Copyright © 2014, Texas Instruments Incorporated

Lowest Power Down Modes (continued)

12.4.1 Lowest Power In Standby (AVDD=DVDD=IOVDD=3.3V)

Consumption as low as 0.59mW

0x00=0x00 //select page0

0x70=0x14 //power down reference

0x00=0x03 //select page3

0x12=0x41 //disable OSC

0x00=0x00 //select page0

12.4.2 Lowest Power In Sleep/Energysense Mode (AVDD=DVDD=IOVDD=3.3V)

Consumption as low as 14mW

Clocks must be running during this process

0x00=0x00 //select page0

0x70=0x72 //enter in sleep mode

0x00=0xfd //select page253

0x14=0x10 //change global bias current

0x00=0x00 //select page0

Now stop the clocks

12.4.3 Lower Power In Sleep/Energysense Mode (AVDD=DVDD 3.3V and IOVDD=1.8V)

Consumption as low as 11.15mW

Clocks must be running during this process

0x00=0x00 //select page0

0x70=0x72 //enter in sleep mode

0x00=0xfd //select page253

0x14=0x10 //change global bias current

0x00=0x00 //select page0

stop the clocks (note: make sure the clock IO is 1.8V)

Copyright © 2014, Texas Instruments Incorporated

12.5 Power-On Reset Sequencing Timing Diagram

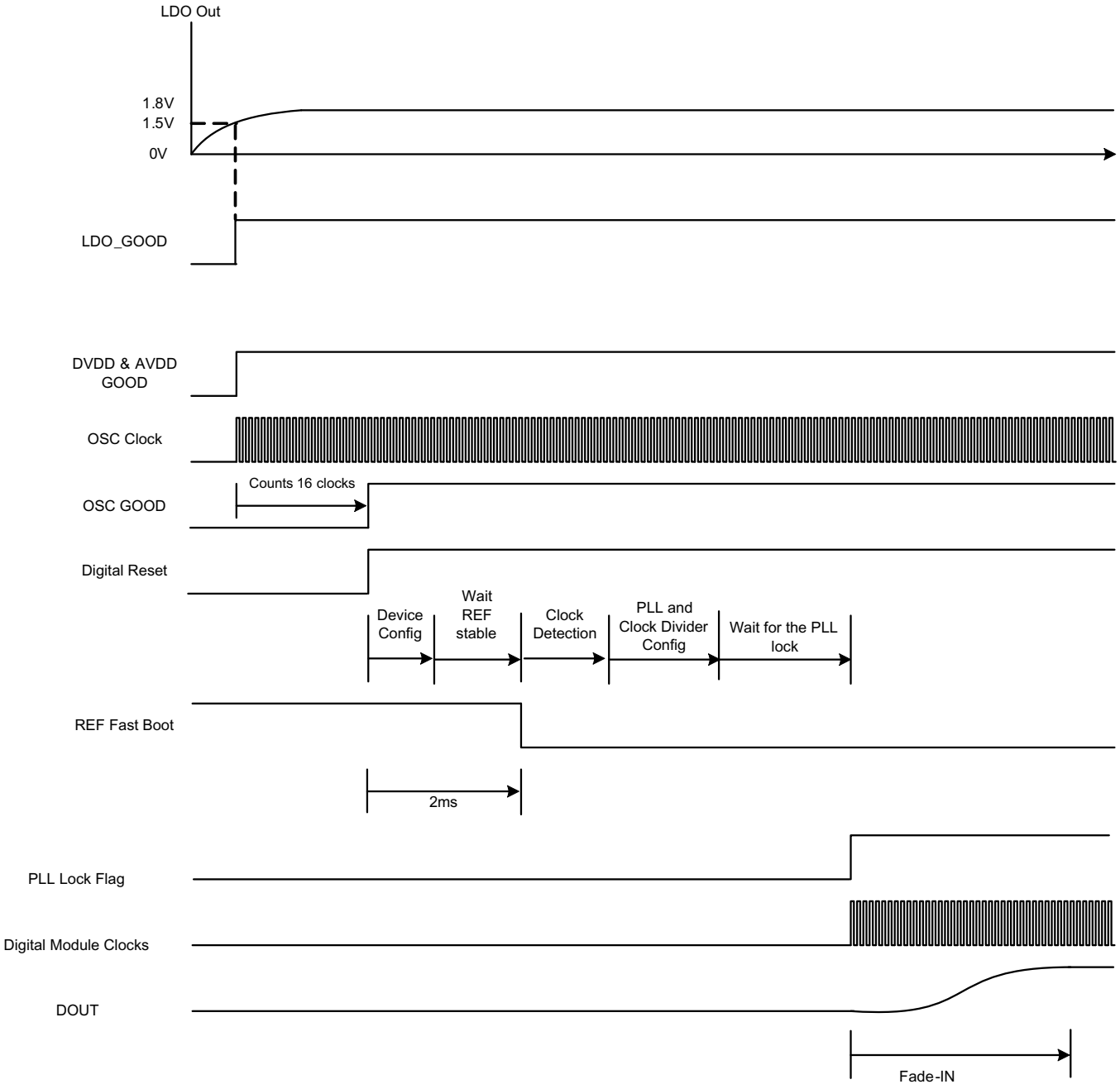

Figure 57. Power-On Reset Timing Diagram

12.6 Power Connection Examples

12.6.1 3.3V AVDD, DVDD, and IOVDD

This is the most typical usage. One single supply, shared between all three supply voltage inputs. Rail-connected decoupling capacitors are not shown. Note; there is no disadvantage in separating the AVDD and DVDD, as the device will wait until both are present before powering up.

Power Connection Examples (continued)

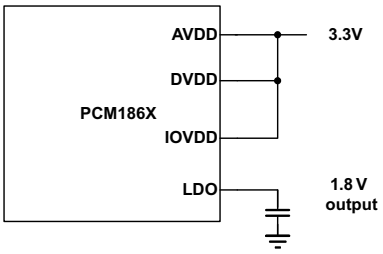

Figure 58. 3.3 V for All supplies

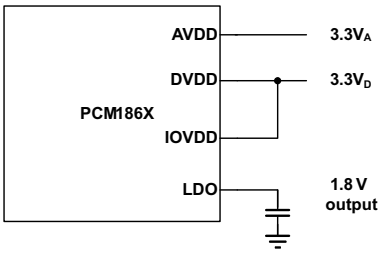

Figure 59. Separate 3.3 V for AVDD and DVDD

12.6.2 3.3V AVDD, DVDD With a 1.8V IOVDD for Lower-Power Applications

The PCM1865-Q1 also supports interfacing to lower power 1.8 V processors. In the presence of an external 1.8 V connected to LDO, the internal LDO that takes DVDD (3.3 V) and converts it to the 1.8 V core voltage is bypassed. Under such conditions, IOVDD will then be used as the 1.8 V source for the digital core of the device. In such systems, it is still important to have 3.3 V for DVDD, as specific sections of the digital core in the device run from 3.3 V.

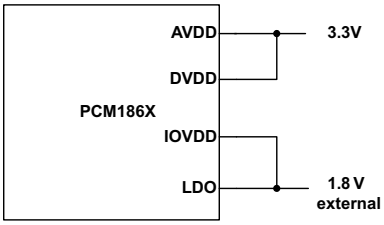

Figure 60. 1.8V IOVDD with 3.3 V for AVDD and DVDD

12.7 Fade In

This is the final stage of the Power Up Sequence. Once the PLL has locked, The ADC will start running, and the data will follow the Fade-IN sequence according to the following steps:

1. Detect a zero crossing audio input.
2. Increment the volume towards 0 dB with S-shaped volume.
3. Repeat from (1) until arrive at the 0 dB. The number of steps from mute to 0dB is 48 steps.
4. If zero crossing does not occur for 8192 sample times (= time out), change the volume per sample time.

Copyright © 2014, Texas Instruments Incorporated

Fade In (continued)

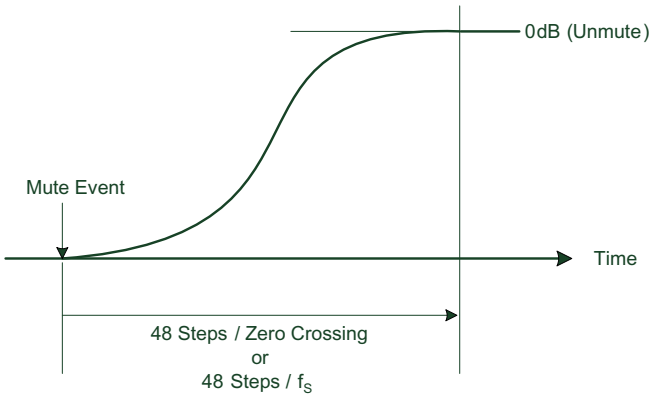

Figure 61. S-Curve Fade-In Behavior

13 Layout

13.1 Layout Guidelines

The PCM1865-Q1 is a relatively simple device to lay out, even on a two layer PCB. The bottom copper plane can be a shared GND, while GND flood can be used on the top plane. For the lowest crosstalk on the inputs, there should be ground planes between the signals coming into the VINxy pins. Decoupling capacitors should be kept as close to the device as possible. Separated grounds aren't needed to achieve data sheet performance, providing analog input traces are kept away from the digital control and clock traces.

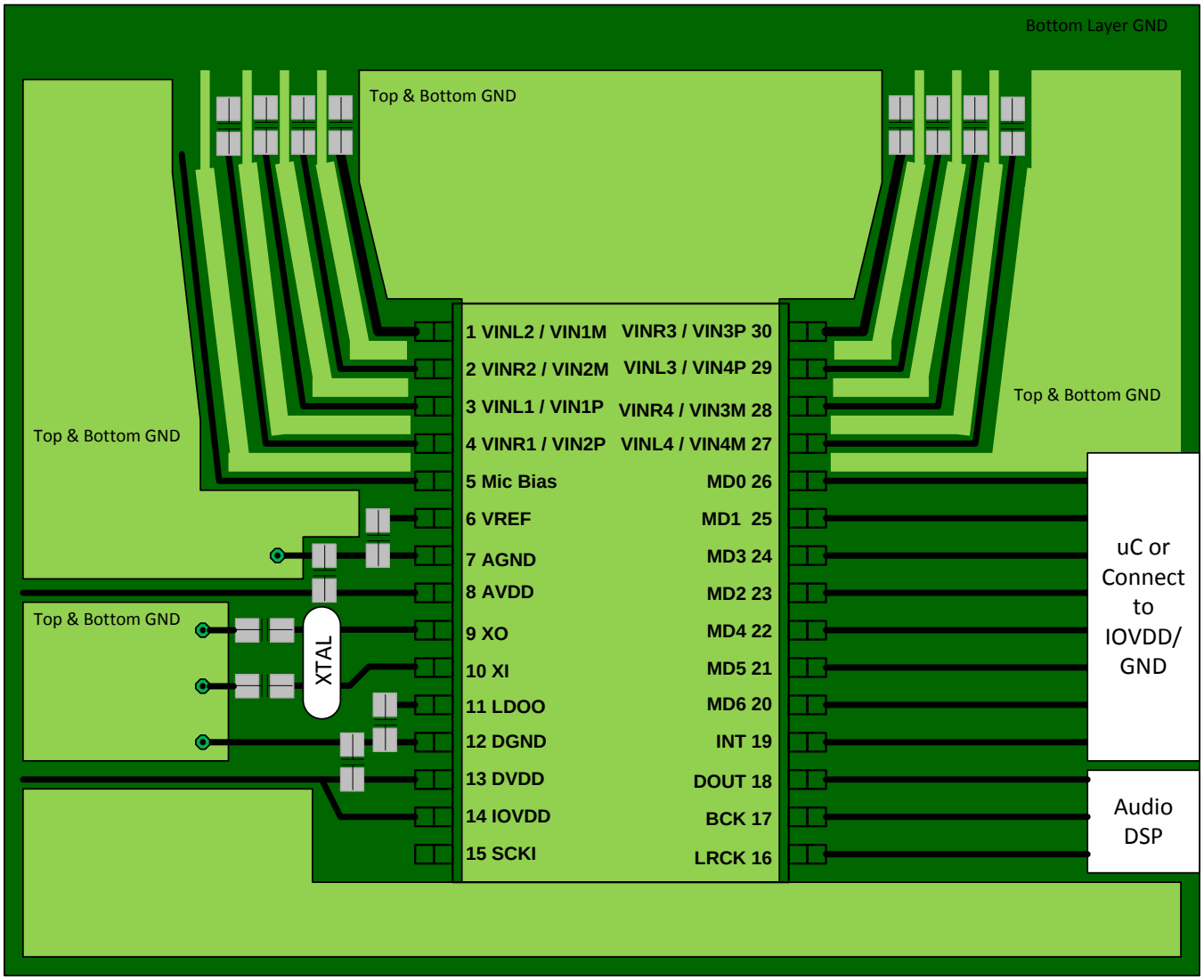

Figure 62. Suggested Layout for PCM1865-Q1 Devices

13.1.1 Grounding and System Partitioning

Designers should try to use the same ground between AGND and DGND to avoid any potential voltage difference between them. On the PCM1865-Q1 EVM, we achieve up to 110 dB SNR using a single ground plane, and ensuring that the return currents for digital signals do not go near the AGND pin or the input signals. Avoid running high frequency clock and control signals near AGND, or any of the VIN pins where possible.

The pin layout of the PCM1865-Q1 partitions into two parts - analog section and digital section. Providing the system is partitioned in such a way that digital signals are routed away from the analog sections, then no digital return currents (for example, clocks) should be generated in the analog circuitry.

Copyright © 2014, Texas Instruments Incorporated

Layout Guidelines (continued)

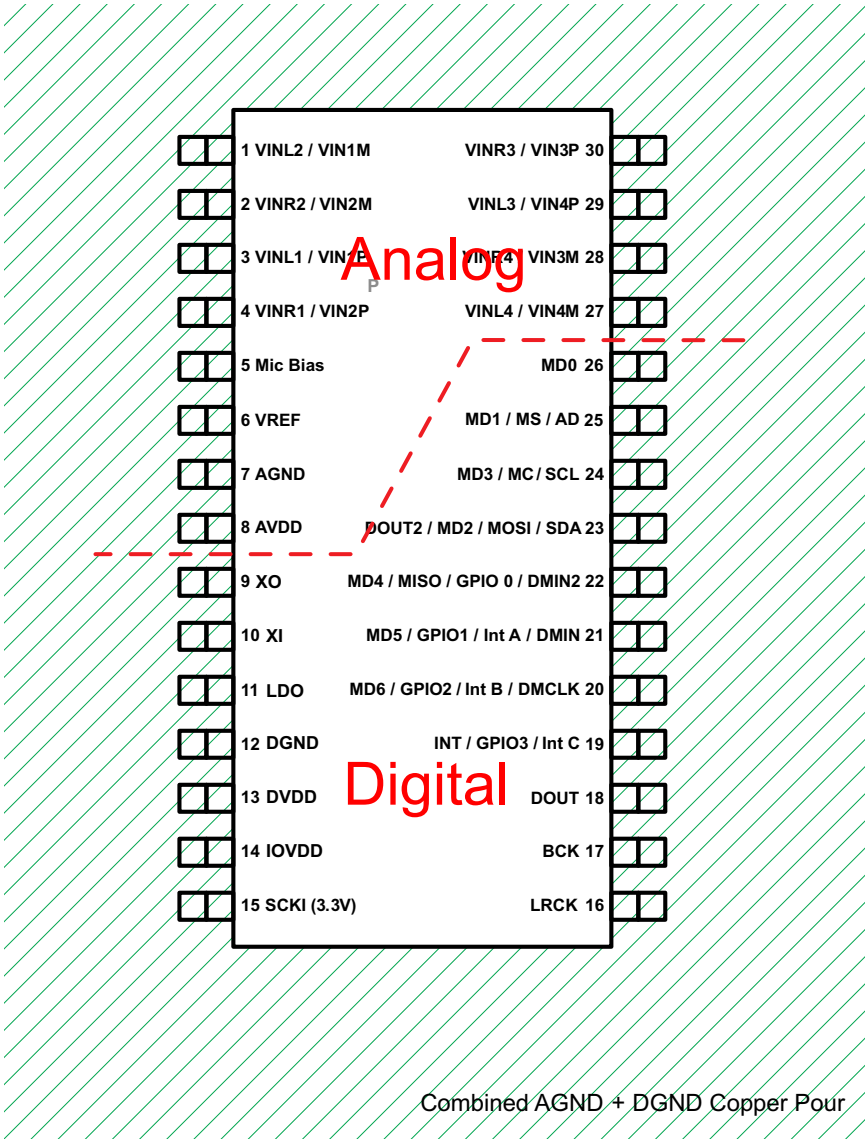

Figure 63. Single Ground With Analog Partitioned to the Top, Digital at the Bottom

With this in mind, when we laid out the EVM, we made sure that any digital return currents had a ground plane to their source/destination that did not require passing below any analog circuitry (see Figure 64).

13.2 Layout Example

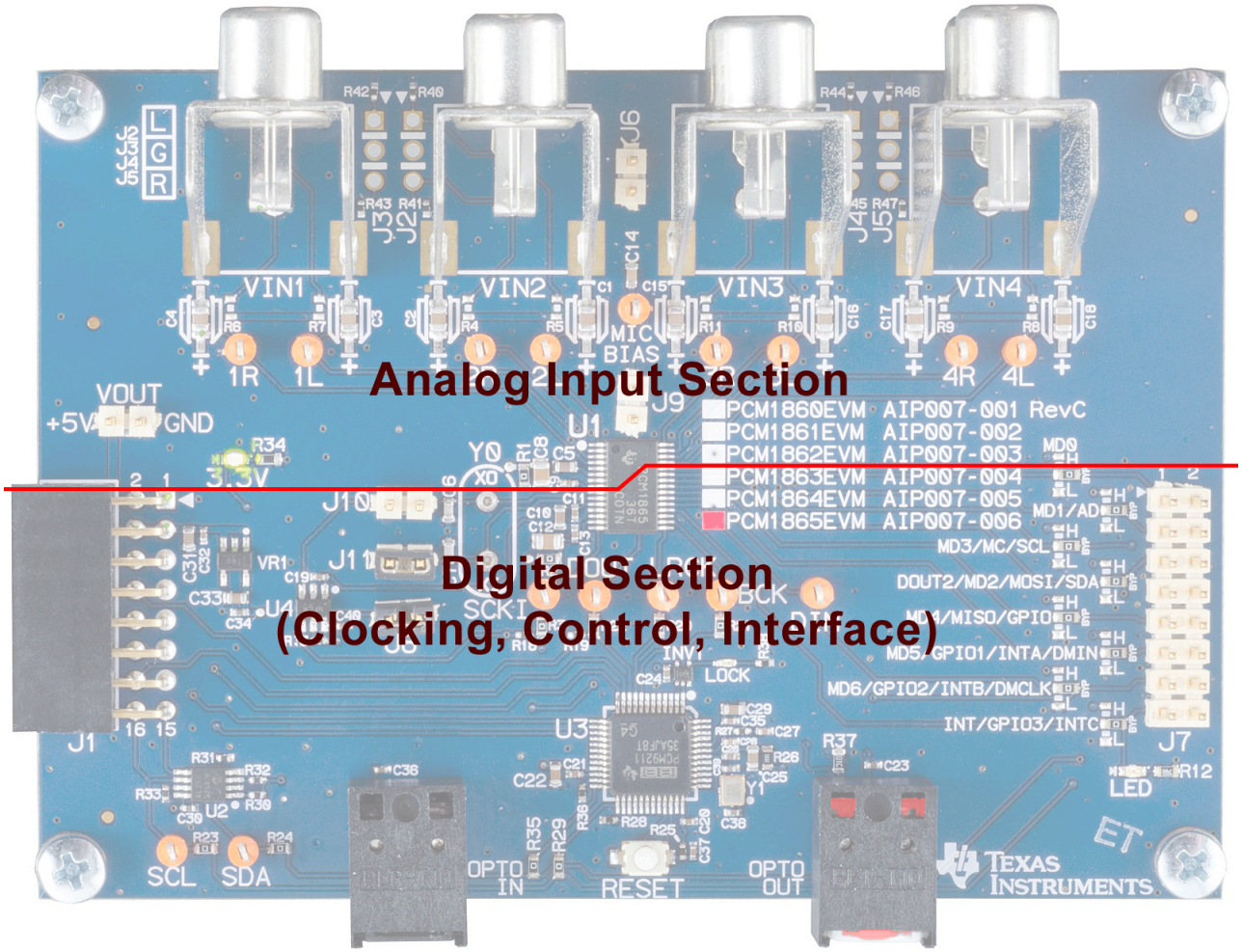

Figure 64. PCM1865-Q1 EVM Signal Partitioning

Copyright © 2014, Texas Instruments Incorporated

14 Programming and Registers Reference

14.1 Coefficient Data Formats

All mixer gain coefficients are 24-bit coefficients using a 4.20 number format. Numbers formatted as 4.20 numbers have 4 bits to the left of the binary point and 20 bits to the right of the binary point.

The most significant bit of the 4.20 number format is the sine bit. It's used, as part of a 2's complement number to invert the phase of that mixer input.

See SLAC663 for a calculator to convert from dB's to the Hexadecimal coefficient required.

14.2 Register Map

The register map is the primary way to configure the PCM1865-Q1 software programmable devices. The register map is separated into four pages (Page 0,1,3 and 253). Page 0 handles all of the device configuration whilst Page 1 is used to indirectly program coefficients into the two fixed function DSPs on the IC. Page 3 contains some additional registers for lower power usage along with Page 253. All undocumented registers should be considered reserved and should not be written.

Changing between pages is done by writing to register 0x00 with the page that you want.

Resetting registers is done by writing 0xFF to register 0x00.

14.2.1 Register Map Summary

Register Map Summary

Page 0									
Dec	**Hex**	**b7**	**b6**	**b5**	**b4**	**b3**	**b2**	**b1**	**b0**
1	0x01	PGA_VAL_CH1_L7	PGA_VAL_CH1_L6	PGA_VAL_CH1_L5	PGA_VAL_CH1_L4	PGA_VAL_CH1_L3	PGA_VAL_CH1_L2	PGA_VAL_CH1_L1	PGA_VAL_CH1_L0
2	0x02	PGA_VAL_CH1_R7	PGA_VAL_CH1_R6	PGA_VAL_CH1_R5	PGA_VAL_CH1_R4	PGA_VAL_CH1_R3	PGA_VAL_CH1_R2	PGA_VAL_CH1_R1	PGA_VAL_CH1_R0
3	0x03	PGA_VAL_CH2_L	RSV	RSV	RSV	RSV	RSV	RSV	RSV
4	0x04	PGA_VAL_CH2_R7	PGA_VAL_CH2_R6	PGA_VAL_CH2_R5	PGA_VAL_CH2_R4	PGA_VAL_CH2_R3	PGA_VAL_CH2_R2	PGA_VAL_CH2_R1	PGA_VAL_CH2_R0
5	0x05	SMOOTH	LINK	DPGA_CLIP_EN	MAX_ATT1	MAX_ATT0	START_ATT1	START_ATT0	AGC_EN
6	0x06	POL	RSV	SEL_L5	SEL_L4	SEL_L3	SEL_L2	SEL_L1	SEL_L0
7	0x07	POL	RSV	SEL_R5	SEL_R4	SEL_R3	SEL_R2	SEL_R1	SEL_R0
8	0x08	POL	RSV	SEL_L5	SEL_L4	SEL_L3	SEL_L2	SEL_L1	SEL_L0
9	0x09	POL	RSV	SEL_R5	SEL_R4	SEL_R3	SEL_R2	SEL_R1	SEL_R0
10	0x0A	RSV	RSV	RSV	RSV	SEL3	SEL2	SEL1	SEL0
11	0x0B	RX_WLEN1	RX_WLEN0	RSV	TDM_LRCK_MODE	TX_WLEN1	TX_WLEN0	FMT1	FMT0
12	0x0C	RSV	RSV	RSV	RSV	RSV	RSV	TDM_OSEL1	TDM_OSEL0
13	0x0D	TX_TDM_OFFSET7	TX_TDM_OFFSET6	TX_TDM_OFFSET5	TX_TDM_OFFSET4	TX_TDM_OFFSET3	TX_TDM_OFFSET2	TX_TDM_OFFSET1	TX_TDM_OFFSET0
14	0x0E	RX_TDM_OFFSET7	RX_TDM_OFFSET6	RX_TDM_OFFSET5	RX_TDM_OFFSET4	RX_TDM_OFFSET3	RX_TDM_OFFSET2	RX_TDM_OFFSET1	RX_TDM_OFFSET0
15	0x0F	DPGA_VAL_CH1_L7	DPGA_VAL_CH1_L6	DPGA_VAL_CH1_L5	DPGA_VAL_CH1_L4	DPGA_VAL_CH1_L3	DPGA_VAL_CH1_L2	DPGA_VAL_CH1_L1	DPGA_VAL_CH1_L0
16	0x10	GPIO1_POL	GPIO1_FUNC2	GPIO1_FUNC1	GPIO1_FUNC0	GPIO0_POL	GPIO0_FUNC2	GPIO0_FUNC1	GPIO0_FUNC0
17	0x11	GPIO3_POL	GPIO3_FUNC2	GPIO3_FUNC1	GPIO3_FUNC0	GPIO2_POL	GPIO2_FUNC2	GPIO2_FUNC1	GPIO2_FUNC0
18	0x12		GPIO1_DIR2	GPIO1_DIR1	GPIO1_DIR0	RSV	GPIO0_DIR2	GPIO0_DIR1	GPIO0_DIR0
19	0x13		GPIO3_DIR2	GPIO3_DIR1	GPIO3_DIR0	RSV	GPIO2_DIR2	GPIO2_DIR1	GPIO2_DIR0
20	0x14	GPIO3_OUT	GPIO2_OUT	GPIO1_OUT	GPIO0_OUT	GPIO3_IN	GPIO2_IN	GPIO1_IN	GPIO0_IN
21	0x15	PULL_DOWN_DIS[3]	PULL_DOWN_DIS[2]	PULL_DOWN_DIS[1]	PULL_DOWN_DIS[0]	RSV	RSV	RSV	RSV
22	0x16	DPGA_VAL_CH1_R7	DPGA_VAL_CH1_R6	DPGA_VAL_CH1_R5	DPGA_VAL_CH1_R4	DPGA_VAL_CH1_R3	DPGA_VAL_CH1_R2	DPGA_VAL_CH1_R1	DPGA_VAL_CH1_R0
23	0x17	DPGA_VAL_CH2_L7	DPGA_VAL_CH2_L6	DPGA_VAL_CH2_L5	DPGA_VAL_CH2_L4	DPGA_VAL_CH2_L3	DPGA_VAL_CH2_L2	DPGA_VAL_CH2_L1	DPGA_VAL_CH2_L0
24	0x18	DPGA_VAL_CH2_R7	DPGA_VAL_CH2_R6	DPGA_VAL_CH2_R5	DPGA_VAL_CH2_R4	DPGA_VAL_CH2_R3	DPGA_VAL_CH2_R2	DPGA_VAL_CH2_R1	DPGA_VAL_CH2_R0
25	0x19	DPGA_CH2_R	DPGA_CH2_L	DPGA_CH1_R	DPGA_CH1_L	APGA_CH2_R	APGA_CH2_L	APGA_CH1_R	APGA_CH1_L

Copyright © 2014, Texas Instruments Incorporated

Register Map (continued)

Register Map Summary (continued)

26	0x1A	DIGMIC_IN1_SEL 1	DIGMIC_IN1_SEL 0	DIGMIC_IN0_SEL 1	DIGMIC_IN0_SEL 0	RSV	RSV	DIGMIC_4CH	DIGMIC_EN
27	0x1B	RSV	RSV	1	0	RSV	RSV	DIN_RESAMP1	DIN_RESAMP0
32	0x20	SCK_XI_SEL1	SCK_XI_SEL0	MST_SCK_SRC	MST_MODE	ADC_CLK_SRC	DSP2_CLK_SRC	DSP1_CLK_SRC	CLKDET_EN
33	0x21	RSV	DIV_NUM6	DIV_NUM5	DIV_NUM4	DIV_NUM3	DIV_NUM2	DIV_NUM1	DIV_NUM0
34	0x22	RSV	DIV_NUM6	DIV_NUM5	DIV_NUM4	DIV_NUM3	DIV_NUM2	DIV_NUM1	DIV_NUM0
35	0x23	RSV	DIV_NUM6	DIV_NUM5	DIV_NUM4	DIV_NUM3	DIV_NUM2	DIV_NUM1	DIV_NUM0
37	0x25	RSV	DIV_NUM6	DIV_NUM5	DIV_NUM4	DIV_NUM3	DIV_NUM2	DIV_NUM1	DIV_NUM0
38	0x26	RSV	DIV_NUM6	DIV_NUM5	DIV_NUM4	DIV_NUM3	DIV_NUM2	DIV_NUM1	DIV_NUM0
39	0x27	DIV_NUM7	DIV_NUM6	DIV_NUM5	DIV_NUM4	DIV_NUM3	DIV_NUM2	DIV_NUM1	DIV_NUM0
40	0x28	RSV	RSV	RSV	LOCK	RSV	RSV	PLL_REF_SEL	PLL_EN
41	0x29	RSV	P6	P5	P4	P3	P2	P1	P0
42	0x2A	RSV	RSV	RSV	RSV	R3	R2	R1	R0
43	0x2B	RSV	RSV	J5	J4	J3	J2	J1	J0
44	0x2C	D_LSB	RSV	RSV	RSV	RSV	RSV	RSV	RSV
45	0x2D	RSV	RSV	D_MSB5	D_MSB4	D_MSB3	D_MSB2	D_MSB1	D_MSB0
48	0x30	CH4R	CH4L	CH3R	CH3L	CH2R	CH2L	CH1R	CH1L
49	0x31	CH4R	CH4L	CH3R	CH3L	CH2R	CH2L	CH1R	CH1L
50	0x32	CH4R	CH4L	CH3R	CH3L	CH2R	CH2L	CH1R	CH1L
52	0x34	RSV	RSV	RSV	TIME4	TIME3	TIME2	TIME1	TIME0
53	0x35	RSV	RSV	RSV	RSV	RSV	TIME2	TIME1	TIME0
54	0x36	RSV	RSV	RSV	RSV	RSV	INT_INTVL2	INT_INTVL1	INT_INTVL0
64	0x40	REF7	REF6	REF5	REF4	REF3	REF2	REF1	REF0
65	0x41	DIFF7	DIFF6	DIFF5	DIFF4	DIFF3	DIFF2	DIFF1	DIFF0
66	0x42	LEVEL7	LEVEL6	LEVEL5	LEVEL4	LEVEL3	LEVEL2	LEVEL1	LEVEL0
67	0x43	REF7	REF6	REF5	REF4	REF3	REF2	REF1	REF0
68	0x44	DIFF7	DIFF6	DIFF5	DIFF4	DIFF3	DIFF2	DIFF1	DIFF0
69	0x45	LEVEL7	LEVEL6	LEVEL5	LEVEL4	LEVEL3	LEVEL2	LEVEL1	LEVEL0
70	0x46	REF7	REF6	REF5	REF4	REF3	REF2	REF1	REF0
71	0x47	DIFF7	DIFF6	DIFF5	DIFF4	DIFF3	DIFF2	DIFF1	DIFF0
72	0x48	LEVEL7	LEVEL6	LEVEL5	LEVEL4	LEVEL3	LEVEL2	LEVEL1	LEVEL0
73	0x49	REF7	REF6	REF5	REF4	REF3	REF2	REF1	REF0
74	0x4A	DIFF7	DIFF6	DIFF5	DIFF4	DIFF3	DIFF2	DIFF1	DIFF0
75	0x4B	LEVEL7	LEVEL6	LEVEL5	LEVEL4	LEVEL3	LEVEL2	LEVEL1	LEVEL0
76	0x4C	REF7	REF6	REF5	REF4	REF3	REF2	REF1	REF0
77	0x4D	DIFF7	DIFF6	DIFF5	DIFF4	DIFF3	DIFF2	DIFF1	DIFF0
78	0x4E	LEVEL7	LEVEL6	LEVEL5	LEVEL4	LEVEL3	LEVEL2	LEVEL1	LEVEL0
79	0x4F	REF7	REF6	REF5	REF4	REF3	REF2	REF1	REF0
80	0x50	DIFF7	DIFF6	DIFF5	DIFF4	DIFF3	DIFF2	DIFF1	DIFF0
81	0x51	LEVEL7	LEVEL6	LEVEL5	LEVEL4	LEVEL3	LEVEL2	LEVEL1	LEVEL0
82	0x52	REF7	REF6	REF5	REF4	REF3	REF2	REF1	REF0
83	0x53	DIFF7	DIFF6	DIFF5	DIFF4	DIFF3	DIFF2	DIFF1	DIFF0
84	0x54	LEVEL7	LEVEL6	LEVEL5	LEVEL4	LEVEL3	LEVEL2	LEVEL1	LEVEL0
85	0x55	REF7	REF6	REF5	REF4	REF3	REF2	REF2	REF0
86	0x56	DIFF7	DIFF6	DIFF5	DIFF4	DIFF3	DIFF2	DIFF1	DIFF0
87	0x57	LEVEL7	LEVEL6	LEVEL5	LEVEL4	LEVEL3	LEVEL2	LEVEL1	LEVEL0
88	0x58	DC_NOLATCH	AUXADC_RDY	DC_RDY	AUXADC_LATCH	AUXADC_DATA_ TYPE	DC_CH2	DC_CH1	DC_CH0
89	0x59	AUXADC_DATA_ LSB7	AUXADC_DATA_ LSB6	AUXADC_DATA_ LSB5	AUXADC_DATA_ LSB4	AUXADC_DATA_ LSB3	AUXADC_DATA_ LSB2	AUXADC_DATA_ LSB1	AUXADC_DATA_ LSB0
90	0x5A	AUXADC_DATA_ MSB7	AUXADC_DATA_ MSB6	AUXADC_DATA_ MSB5	AUXADC_DATA_ MSB4	AUXADC_DATA_ MSB3	AUXADC_DATA_ MSB2	AUXADC_DATA_ MSB1	AUXADC_DATA_ MSB0
96	0x60	RSV	RSV	RSV	POSTPGA_CP	CLKERR	DC_CHANG	DIN_TOGGLE	ENGSTR
97	0x61	RSV	RSV	RSV	POSTPGA_CP	CLKERR	DC_CHANG	DIN_TOGGLE	ENGSTR
98	0x62	RSV	RSV	POL1	POL0	RSV	RSV	WIDTH1	WIDTH0
112	0x70	RSV	RSV	RSV	RSV	RSV	PWRDN	SLEEP	STBY
113	0x71	2CH	RSV	FLT	HPF_EN	MUTE_CH2_R	MUTE_CH2_L	MUTE_CH1_R	MUTE_CH1_L

Copyright © 2014, Texas Instruments Incorporated

Register Map (continued)

Register Map Summary (continued)

114	0x72	RSV	RSV	RSV	RSV	STATE3	STATE2	STATE1	STATE0
115	0x73	RSV	RSV	RSV	RSV	RSV	INFO2	INFO1	INFO0
116	0x74	RSV	BCK_RATIO2	BCK_RATIO1	BCK_RATIO0	RSV	SCK_RATIO2	SCK_RATIO1	SCK_RATIO0
117	0x75	RSV	LRCKHLT	BCKHLT	SCKHTL	RSV	LRCKERR	BCKERR	SCKERR
120	0x78		RSV	RSV	RSV	RSV	DVDD	AVDD	LDO
Page 1									
Dec	**Hex**	**b7**	**b6**	**b5**	**b4**	**b3**	**b2**	**b1**	**b0**
1	0x01	RSV	RSV	RSV	DONE	RSV	BUSY	R_REQ	W_REQ
2	0x02	RSV	MEM_ADDR[6:0]6	MEM_ADDR[6:0]5	MEM_ADDR[6:0]4	MEM_ADDR[6:0]3	MEM_ADDR[6:0]2	MEM_ADDR[6:0]1	MEM_ADDR[6:0]0
4	0x04	MEM_WDATA_07	MEM_WDATA_06	MEM_WDATA_05	MEM_WDATA_04	MEM_WDATA_03	MEM_WDATA_02	MEM_WDATA_01	MEM_WDATA_00
5	0x05	MEM_WDATA_17	MEM_WDATA_16	MEM_WDATA_15	MEM_WDATA_14	MEM_WDATA_13	MEM_WDATA_12	MEM_WDATA_11	MEM_WDATA_10
6	0x06	MEM_WDATA_27	MEM_WDATA_26	MEM_WDATA_25	MEM_WDATA_24	MEM_WDATA_23	MEM_WDATA_22	MEM_WDATA_21	MEM_WDATA_20
7	0x07	MEM_WDATA_3	RSV	RSV	RSV	RSV	RSV	RSV	RSV
8	0x08	MEM_RDATA_07	MEM_RDATA_06	MEM_RDATA_05	MEM_RDATA_04	MEM_RDATA_03	MEM_RDATA_02	MEM_RDATA_01	MEM_RDATA_00
9	0x09	MEM_RDATA_17	MEM_RDATA_16	MEM_RDATA_15	MEM_RDATA_14	MEM_RDATA_13	MEM_RDATA_12	MEM_RDATA_11	MEM_RDATA_10
10	0x0A	MEM_RDATA_27	MEM_RDATA_26	MEM_RDATA_25	MEM_RDATA_24	MEM_RDATA_23	MEM_RDATA_22	MEM_RDATA_21	MEM_RDATA_20
11	0x0B	MEM_RDATA_3	RSV	RSV	RSV	RSV	RSV	RSV	RSV
Page 3									
Dec	**Hex**	**b7**	**b6**	**b5**	**b4**	**b3**	**b2**	**b1**	**b0**
18	0x12	RSV	RSV	RSV	RSV	RSV	RSV	RSV	PD
21	0x15	RSV	RSV	RSV	TERM	RSV	RSV	RSV	PDZ
Page 253									
Dec	**Hex**	**b7**	**b6**	**b5**	**b4**	**b3**	**b2**	**b1**	**b0**
20	0x14	PGA_ICI1	PGA_ICI0	REF_ICI1	REF_ICI0	RSV	RSV	RSV	RSV

14.2.2 Page 0 Registers

Page 0 / Register 1 (Hex 0x01)

Dec	Hex	b7	b6	b5	b4	b3	b2	b1	b0
1	0x01	PGA_VAL_CH1_L7	PGA_VAL_CH1_L6	PGA_VAL_CH1_L5	PGA_VAL_CH1_L4	PGA_VAL_CH1_L3	PGA_VAL_CH1_L2	PGA_VAL_CH1_L1	PGA_VAL_CH1_L0
Reset Value		0	0	0	0	0	0	0	0

PGA_VAL_CH1_L [7:0]	**PGA Value Channel 1 Left** : Global Channel gain for ADC1L. (Analog + Digital). Analog gain only, if manual gain mapping is enabled. (0x19) Default value: 00000000 Specify 2s complement value with 7.1 format. 1110100_0: -12.0dB (Min) : 1111111_0: -1.0dB 1111111_1: 0.5dB 0000000_0: 0.0dB 0000000_1: +0.5dB 0000001_0: +1.0dB : 0001100_0: +12.0dB : 0010100_0: +20.0dB :

Copyright © 2014, Texas Instruments Incorporated

	0100000_0: +32.0dB : 0101000_0: +40.0dB (Max)

Page 0 / Register 2 (Hex 0x02)

Dec	Hex	b7	b6	b5	b4	b3	b2	b1	b0
2	0x02	PGA_VAL_CH1_R7	PGA_VAL_CH1_R6	PGA_VAL_CH1_R5	PGA_VAL_CH1_R4	PGA_VAL_CH1_R3	PGA_VAL_CH1_R2	PGA_VAL_CH1_R1	PGA_VAL_CH1_R0
Reset Value		0	0	0	0	0	0	0	0

PGA_VAL_CH1_R[7:0]	**PGA Value Channel 1 Right** Programmable Gain Value, Channel 1 Right: (See Pg0, 0x01 for complete description.) Default value: 00000000 (See Pg0, 0x01 for complete description.)

Page 0 / Register 3 (Hex 0x03)

Dec	Hex	b7	b6	b5	b4	b3	b2	b1	b0
3	0x03	PGA_VAL_CH2_L7	PGA_VAL_CH2_L6	PGA_VAL_CH2_L5	PGA_VAL_CH2_L4	PGA_VAL_CH2_L3	PGA_VAL_CH2_L2	PGA_VAL_CH2_L1	PGA_VAL_CH2_L0
Reset Value		0	0	0	0	0	0	0	0

RSV	**Reserved** Reserved. Do not access.
PGA_VAL_CH2_L	**PGA Value Channel 2 Left** Programmable Gain Value, Channel 2 Left: (See Pg0, 0x01 for complete description.) Default value: 0 (See Pg0, 0x01 for complete description.)

Page 0 / Register 4 (Hex 0x04)

Dec	Hex	b7	b6	b5	b4	b3	b2	b1	b0
4	0x04	PGA_VAL_CH2_R7	PGA_VAL_CH2_R6	PGA_VAL_CH2_R5	PGA_VAL_CH2_R4	PGA_VAL_CH2_R3	PGA_VAL_CH2_R2	PGA_VAL_CH2_R1	PGA_VAL_CH2_R0
Reset Value		0	0	0	0	0	0	0	0

PGA_VAL_CH2_R[7:0]	**PGA Value Channel 2 Right** Programmable Gain Value, Channel 2 Right: (See Pg0, 0x01 for complete description.) Default value: 00000000 (See Pg0, 0x01 for complete description.)

Page 0 / Register 5 (Hex 0x05)

Dec	Hex	b7	b6	b5	b4	b3	b2	b1	b0
5	0x05	SMOOTH	LINK	DPGA_CLIP_EN	MAX_ATT1	MAX_ATT0	START_ATT1	START_ATT0	AGC_EN
Reset Value		1	0	0	0	0	1	1	0

SMOOTH	**PGA Control - Enable PGA Smooth Change** Default value: 1 0: Immediate Change 1: Smooth Change (Default)
LINK	**Link PGA control** Default value: 0

Copyright © 2014, Texas Instruments Incorporated

	0: Independent control (Default) 1: ch1[R]/Ch2[L]/Ch2[R] follow Ch1[L] PGA value.
DPGA_CLIP_EN	**Enable Clipping Detection After Digital PGA** Default value: 0 0: Disable (Default) 1: Enable
MAX_ATT[1:0]	**Attenuation limit of the Automatic Clipping Suppression** Default value: 00 00: -3dB (Default) 01: -4dB 10: -5dB 11: -6dB
START_ATT[1:0]	**Start Automatic Clipping Suppression after clipping is detected CLIP_NUM times** Default value: 11 00: 80 01: 40 10: 20 11: 10 (Default)
AGC_EN	**Enable Automatic Clipping Suppression** Default value: 0 0: Disable (Default) 1: Enable

Page 0 / Register 6 (Hex 0x06)

Dec	Hex	b7	b6	b5	b4	b3	b2	b1	b0
6	0x06	POL	RSV	SEL_L5	SEL_L4	SEL_L3	SEL_L2	SEL_L1	SEL_L0
Reset Value		0	1	0	0	0	0	0	1

RSV	**Reserved** Reserved. Do not access.
POL	**ADC1_INPUT_SEL_L - Change signal polarity** Default value: 0 0: Normal (Default) 1: Inverted
SEL_L[5:0]	**ADC Input Channel Select (ADC1L)** Default value: 000001 00_0000: No Select 00_0001: VINL1[SE] (Default) 00_0010: VINL2[SE] 00_0011: VINL2[SE] + VINL1[SE] 00_0100: VINL3[SE] 00_0101: VINL3[SE] + VINL1[SE] 00_0110: VINL3[SE] + VINL2[SE] 00_0111: VINL3[SE] + VINL2[SE] + VINL1[SE] 00_1000: VINL4[SE] 00_1001: VINL4[SE] + VINL1[SE]

Copyright © 2014, Texas Instruments Incorporated

	00_1010: VINL4[SE] + VINL2[SE] 00_1011: VINL4[SE] + VINL2[SE] + VINL1[SE] 00_1100: VINL4[SE] + VINL3[SE] 00_1101: VINL4[SE] + VINL3[SE] + VINL1[SE] 00_1110: VINL4[SE] + VINL3[SE] + VINL2[SE] 00_1111: VINL4[SE] + VINL3[SE] + VINL2[SE] + VINL1[SE] 01_0000: {VIN1P, VIN1M}[DIFF] 10_0000: {VIN4P, VIN4M}[DIFF] 11_0000: {VIN1P, VIN1M}[DIFF] + {VIN4P, VIN4M}[DIFF]

Page 0 / Register 7 (Hex 0x07)

Dec	Hex	b7	b6	b5	b4	b3	b2	b1	b0
7	0x07	POL	RSV	SEL_R5	SEL_R4	SEL_R3	SEL_R2	SEL_R1	SEL_R0
Reset Value		0	1	0	0	0	0	0	1

RSV	**Reserved** Reserved. Do not access.
POL	**ADC1_INPUT_SEL_R - Change signal polarity** Default value: 0 0: Normal (Default) 1: Inverted
SEL_R[5:0]	**ADC Input Channel Select (ADC1R)** Default value: 000001 00_0000: No Select 00_0001: VINR1[SE] (Default) 00_0010: VINR2[SE] 00_0011: VINR2[SE] + VINR1[SE] 00_0100: VINR3[SE] 00_0101: VINR3[SE] + VINR1[SE] 00_0110: VINR3[SE] + VINR2[SE] 00_0111: VINR3[SE] + VINR2[SE] + VINR1[SE] 00_1000: VINR4[SE] 00_1001: VINR4[SE] + VINR1[SE] 00_1010: VINR4[SE] + VINR2[SE] 00_1011: VINR4[SE] + VINR2[SE] + VINR1[SE] 00_1100: VINR4[SE] + VINR3[SE] 00_1101: VINR4[SE] + VINR3[SE] + VINR1[SE] 00_1110: VINR4[SE] + VINR3[SE] + VINR2[SE] 00_1111: VINR4[SE] + VINR3[SE] + VINR2[SE] + VINR1[SE] 01_0000: {VIN2P, VIN2M}[DIFF] 10_0000: {VIN3P, VIN3M}[DIFF] 11_0000: {VIN2P, VIN2M}[DIFF] + {VIN3P, VIN3M}[DIFF]

Page 0 / Register 8 (Hex 0x08)

Dec	Hex	b7	b6	b5	b4	b3	b2	b1	b0
8	0x08	POL	RSV	SEL_L5	SEL_L4	SEL_L3	SEL_L2	SEL_L1	SEL_L0
Reset Value		0	1	0	0	0	0	1	0

Copyright © 2014, Texas Instruments Incorporated

RSV	**Reserved** Reserved. Do not access.
POL	**ADC2_INPUT_SEL_L - Change signal polarity** Default value: 0 0: Normal (Default) 1: Inverted
SEL_L[5:0]	**ADC 2 Input Channel Select (ADC2L)** Default value: 000010 00_0000: No Select 00_0001: VINL1[SE] 00_0010: VINL2[SE] (Default) 00_0011: VINL2[SE] + VINL1[SE] 00_0100: VINL3[SE] 00_0101: VINL3[SE] + VINL1[SE] 00_0110: VINL3[SE] + VINL2[SE] 00_0111: VINL3[SE] + VINL2[SE] + VINL1[SE] 00_1000: VINL4[SE] 00_1001: VINL4[SE] + VINL1[SE] 00_1010: VINL4[SE] + VINL2[SE] 00_1011: VINL4[SE] + VINL2[SE] + VINL1[SE] 00_1100: VINL4[SE] + VINL3[SE] 00_1101: VINL4[SE] + VINL3[SE] + VINL1[SE] 00_1110: VINL4[SE] + VINL3[SE] + VINL2[SE] 00_1111: VINL4[SE] + VINL3[SE] + VINL2[SE] + VINL1[SE] 01_0000: {VIN1P, VIN1M}[DIFF] 10_0000: {VIN4P, VIN4M}[DIFF] 11_0000: {VIN1P, VIN1M}[DIFF] + {VIN4P, VIN4M}[DIFF]

Page 0 / Register 9 (Hex 0x09)

Dec	Hex	b7	b6	b5	b4	b3	b2	b1	b0
9	0x09	POL	RSV	SEL_R5	SEL_R4	SEL_R3	SEL_R2	SEL_R1	SEL_R0
Reset Value		0	1	0	0	0	0	1	0

RSV	**Reserved** Reserved. Do not access.
POL	**ADC2_INPUT_SEL_R - Change signal polarity** Default value: 0 0: Normal (Default) 1: Inverted
SEL_R[5:0]	**ADC 2 Input Channel Select (ADC2R)** Default value: 000010 00_0000: No Select 00_0001: VINR1[SE] 00_0010: VINR2[SE] (Default) 00_0011: VINR2[SE] + VINR1[SE] 00_0100: VINR3[SE]

Copyright © 2014, Texas Instruments Incorporated

	00_0101: VINR3[SE] + VINR1[SE] 00_0110: VINR3[SE] + VINR2[SE] 00_0111: VINR3[SE] + VINR2[SE] + VINR1[SE] 00_1000: VINR4[SE] 00_1001: VINR4[SE] + VINR1[SE] 00_1010: VINR4[SE] + VINR2[SE] 00_1011: VINR4[SE] + VINR2[SE] + VINR1[SE] 00_1100: VINR4[SE] + VINR3[SE] 00_1101: VINR4[SE] + VINR3[SE] + VINR1[SE] 00_1110: VINR4[SE] + VINR3[SE] + VINR2[SE] 00_1111: VINR4[SE] + VINR3[SE] + VINR2[SE] + VINR1[SE] 01_0000: {VIN2P, VIN2M}[DIFF] 10_0000: {VIN3P, VIN3M}[DIFF] 11_0000: {VIN2P, VIN2M}[DIFF] + {VIN3P, VIN3M}[DIFF]

Page 0 / Register 10 (Hex 0x0A)

Dec	Hex	b7	b6	b5	b4	b3	b2	b1	b0
10	0x0A	RSV	RSV	RSV	RSV	SEL3	SEL2	SEL1	SEL0
Reset Value		0	0	0	0	0	0	0	0

RSV	**Reserved** Reserved. Do not access.
SEL[3:0]	**Secondary ADC Input Channel (Note, Do not select the same channel that is already in use by an audio ADC)** Default value: 0000 0: No Select (Default) 1: ch1(L) 2: ch1(R) 3: ch2(L) 4: ch2(R) 5: ch3(L) 6: ch3(R) 7: ch4(L) 8: ch4(R)

Page 0 / Register 11 (Hex 0x0B)

Dec	Hex	b7	b6	b5	b4	b3	b2	b1	b0
11	0x0B	RX_WLEN1	RX_WLEN0	RSV	TDM_LRCK_MODE	TX_WLEN1	TX_WLEN0	FMT1	FMT0
Reset Value		0	1	0	0	0	1	0	0

RSV	**Reserved** Reserved. Do not access.
RX_WLEN[1:0]	**Receive PCM Word length** Default value: 01 00: Reserved 01: 24bit (Default) 10: 20bit 11: 16bit

Copyright © 2014, Texas Instruments Incorporated

TDM_LRCK_MODE	**Notes: 1. TDM format can support 2 channels / 4 channels / 6 channels with one device 2. When BCK to LRCK ratio is 256, FMT must be configured as TDM format.** Default value: 0 Configure the duty cycle of LRCK when I2S is configured as TDM mode 0: duty cycle of LRCK is 50% 1: duty cycle of LRCK is 1/256 (similar DSP mode)
TX_WLEN[1:0]	**Stereo PCM Word length** Default value: 01 00: Reserved 01: 24bit (Default) 10: 20bit 11: 16bit
FMT[1:0]	**Serial Audio Interface Format (TDM/DSP Mode)** Default value: 00 0: I2S (Default) 1: Left Justified 2: Right Justified 3: TDM/DSP (256Fs BCK is required)

Page 0 / Register 12 (Hex 0x0C)

Dec	Hex	b7	b6	b5	b4	b3	b2	b1	b0
12	0x0C	RSV	RSV	RSV	RSV	RSV	RSV	TDM_OSEL1	TDM_OSEL0
Reset Value		0	0	0	0	0	0	0	0

RSV	**Reserved** Reserved. Do not access.
TDM_OSEL[1:0]	**Select TDM transmission data. Ch2 data only available on 4ch devices.** Default value: 00 00: 2ch TDM (Default) DOUT1: ch1[L], ch1[R] DOUT2: ch2[L], ch2[R] 01: 4ch TDM DOUT1: ch1[L], ch1[R], ch2[L], ch2[R] DOUT2: ch1[L], ch1[R], ch2[L], ch2[R] 10: 6ch TDM DOUT1: ch1[L], ch1[R], ch2[L], ch2[R], sec_ADC_LPF, sec_ADC_HPF DOUT2: ch1[L], ch1[R], ch2[L], ch2[R], sec_ADC_LPF, sec_ADC_HPF 11: RESERVED

Page 0 / Register 13 (Hex 0x0D)

Dec	Hex	b7	b6	b5	b4	b3	b2	b1	b0
13	0x0D	TX_TDM_OFFSET7	TX_TDM_OFFSET6	TX_TDM_OFFSET5	TX_TDM_OFFSET4	TX_TDM_OFFSET3	TX_TDM_OFFSET2	TX_TDM_OFFSET1	TX_TDM_OFFSET0
Reset Value		0	0	0	0	0	0	0	0

Copyright © 2014, Texas Instruments Incorporated

TX_TDM_OFFSET[7:0]	**Set offset position in a serial audio data frame. This setting is enabled when 0x0B FMT[1:0] is set to DSP format.** Default value: 00000000 0: 0 (Default) 1: 1 BCK (Same as I2S) 2: 2 BCK 3: 3 BCK : : 255: 255 BCK

Page 0 / Register 14 (Hex 0x0E)

Dec	Hex	b7	b6	b5	b4	b3	b2	b1	b0
14	0x0E	RX_TDM_OFFSET7	RX_TDM_OFFSET6	RX_TDM_OFFSET5	RX_TDM_OFFSET4	RX_TDM_OFFSET3	RX_TDM_OFFSET2	RX_TDM_OFFSET1	RX_TDM_OFFSET0
Reset Value		0	0	0	0	0	0	0	0

RX_TDM_OFFSET[7:0]	**Set offset position in a serial audio data frame. This setting is enabled when I2S_RX_FMT is set to DSP format.** Default value: 00000000 Offset position in a serial audio data frame. 0: 0 (Default) 1: 1 BCK (Same as I2S, only if LRCK is configured as 50/50 duty cycle) 2: 2 BCK 3: 3 BCK : : 255: 255 BCK

Page 0 / Register 15 (Hex 0x0F)

Dec	Hex	b7	b6	b5	b4	b3	b2	b1	b0
15	0x0F	DPGA_VAL_CH1_L7	DPGA_VAL_CH1_L6	DPGA_VAL_CH1_L5	DPGA_VAL_CH1_L4	DPGA_VAL_CH1_L3	DPGA_VAL_CH1_L2	DPGA_VAL_CH1_L1	DPGA_VAL_CH1_L0
Reset Value		0	0	0	0	0	0	0	0

DPGA_VAL_CH1_L[7:0]	**Gain setting for digital PGA when the device is used in the following scenarios:** i. Analog PGA gain and digital PGA are set separately. ii. Digital Microphone Interface is used (4-channel device only, when Manual Gain Mapping is enabled in register 0x19) Default value: 00000000 Specify 2s complement value with 7.1 format. 0x28 - 0x3F in 0.5 dB steps Others: Reserved

Page 0 / Register 16 (Hex 0x10)

Dec	Hex	b7	b6	b5	b4	b3	b2	b1	b0
16	0x10	GPIO1_POL	GPIO1_FUNC2	GPIO1_FUNC1	GPIO1_FUNC0	GPIO0_POL	GPIO0_FUNC2	GPIO0_FUNC1	GPIO0_FUNC0
Reset Value		0	0	0	0	0	0	0	1

Copyright © 2014, Texas Instruments Incorporated

GPIO1_POL	**GPIO1 Polarity Control** Default value: 0 0: Normal (Default) 1: Invert
GPIO1_FUNC[2:0]	**Function select, GPIO1** Default value: 000 000: GPIO1(Default) 001: Digital MIC Input 1(In) 010: INT 011: Internal SCK (Out) 100: Digital Mute (In) 101: DOUT2 (Out) 110: DIN (In) 111: Reserved
GPIO0_POL	**GPIO0 Polarity Control** Default value: 0 0: Normal (Default) 1: Invert
GPIO0_FUNC[2:0]	**Function select, GPIO0** Default value: 001 000: GPIO0 001: SPI MISO (Out:Default) 010: RESERVED 011: Internal SCK (Out) 100: Digital Mute (In) 101: DOUT2 (Out) 110: DIN (In) 111: Reserved

Page 0 / Register 17 (Hex 0x11)

Dec	Hex	b7	b6	b5	b4	b3	b2	b1	b0
17	0x11	GPIO3_POL	GPIO3_FUNC2	GPIO3_FUNC1	GPIO3_FUNC0	GPIO2_POL	GPIO2_FUNC2	GPIO2_FUNC1	GPIO2_FUNC0
Reset Value		0	0	1	0	0	0	0	0

GPIO3_POL	**GPIO3 Polarity Control** Default value: 0 0: Normal (Default) 1: Invert
GPIO3_FUNC[2:0]	**Function select, GPIO3** Default value: 010 000: GPIO3 001: (Reserved) 010: INT (Default) 011: Internal SCK (Out) 100: Digital Mute (In)

Copyright © 2014, Texas Instruments Incorporated

	101: DOUT2 (Out) 110: DIN (In) 111: Reserved
GPIO2_POL	**GPIO2 Polarity Control** Default value: 0 0: Normal (Default) 1: Invert
GPIO2_FUNC[2:0]	**Function select, GPIO2** Default value: 000 000: GPIO2(Default) 001: Digital MIC Clock Output (Out) 010: INT 011: Internal SCK (Out) 100: Digital Mute (In) 101: DOUT2 (Out) 110: DIN (In) 111: Reserved

Page 0 / Register 18 (Hex 0x12)

Dec	Hex	b7	b6	b5	b4	b3	b2	b1	b0
18	0x12		GPIO1_DIR2	GPIO1_DIR1	GPIO1_DIR0	RSV	GPIO0_DIR2	GPIO0_DIR1	GPIO0_DIR0
Reset Value		0	0	0	0	0	0	0	0

RSV	**Reserved** Reserved. Do not access.
GPIO1_DIR[2:0]	**Direction control of GPIO1 when it is configured as GPIO function** Default value: 000 000: Input (Default) 001: Input with 'sticky bit' 010: Input with toggle detection 011: Raw input (not deglictched) 100: Output 101: Open Drain 110: (Reserved) 111: (Reserved)
GPIO0_DIR[2:0]	**Direction control of GPIO0 when it is configured as GPIO function** Default value: 000 000: Input (Default) 001: Input with 'sticky bit' 010: Input with toggle detection 011: Raw input (not deglictched) 100: Output 101: Open Drain 110: (Reserved) 111: (Reserved)

Copyright © 2014, Texas Instruments Incorporated

Page 0 / Register 19 (Hex 0x13)

Dec	Hex	b7	b6	b5	b4	b3	b2	b1	b0
19	0x13		GPIO3_DIR2	GPIO3_DIR1	GPIO3_DIR0	RSV	GPIO2_DIR2	GPIO2_DIR1	GPIO2_DIR0
Reset Value		0	0	0	0	0	0	0	0

RSV	**Reserved** Reserved. Do not access.
GPIO3_DIR[2:0]	Direction control of GPIO3 when it is configured as GPIO function Default value: 000 000: Input (Default) 001: Input with 'sticky bit' 010: Input with toggle detection 011: Raw input (not deglictched) 100: Output 101: Open Drain 110: (Reserved) 111: (Reserved)
GPIO2_DIR[2:0]	Direction control of GPIO2 when it is configured as GPIO function Default value: 000 000: Input (Default) 001: Input with 'sticky bit' 010: Input with toggle detection 011: Raw input (not deglictched) 100: Output 101: Open Drain 110: (Reserved) 111: (Reserved)

Page 0 / Register 20 (Hex 0x14)

Dec	Hex	b7	b6	b5	b4	b3	b2	b1	b0
20	0x14	GPIO3_OUT	GPIO2_OUT	GPIO1_OUT	GPIO0_OUT	GPIO3_IN	GPIO2_IN	GPIO1_IN	GPIO0_IN
Reset Value		0	0	0	0	0	0	0	0

GPIO3_OUT	**GPIO_STATE - Output status** Default value: 0
GPIO2_OUT	Default value: 0
GPIO1_OUT	Default value: 0
GPIO0_OUT	Default value: 0
GPIO3_IN	**Input status (or toggle status) of the GPIOs** The sticky flag is cleared when this register is read. Default value: 0
GPIO2_IN	

Copyright © 2014, Texas Instruments Incorporated

	Default value: 0
GPIO1_IN	
	Default value: 0
GPIO0_IN	
	Default value: 0

Page 0 / Register 21 (Hex 0x15)

Dec	Hex	b7	b6	b5	b4	b3	b2	b1	b0
21	0x15	PULL_DOWN_DIS[3]	PULL_DOWN_DIS[2]	PULL_DOWN_DIS[1]	PULL_DOWN_DIS[0]	RSV	RSV	RSV	RSV
Reset Value		0	0	0	0	0	0	0	0

RSV	**Reserved** Reserved. Do not access.
PULL_DOWN_DIS[3]	**Enable or disable the pull down resistor of IO pins** Default value: 0 0: Enable the pull down of GPIO3/IntC (pin 19) 1: Disable the pull down
PULL_DOWN_DIS[2]	Default value: 0 0: Enable the pull down of GPIO2/IntB (pin 20) 1: Disable the pull down
PULL_DOWN_DIS[1]	Default value: 0 0: Enable the pull down of GPIO1 (pin 21) 1: Disable the pull down
PULL_DOWN_DIS[0]	Default value: 0 0: Enable the pull down of GPIO0 (pin 22) 1: Disable the pull down

Page 0 / Register 22 (Hex 0x16)

Dec	Hex	b7	b6	b5	b4	b3	b2	b1	b0
22	0x16	DPGA_VAL_CH1_R7	DPGA_VAL_CH1_R6	DPGA_VAL_CH1_R5	DPGA_VAL_CH1_R4	DPGA_VAL_CH1_R3	DPGA_VAL_CH1_R2	DPGA_VAL_CH1_R1	DPGA_VAL_CH1_R0
Reset Value		0	0	0	0	0	0	0	0

DPGA_VAL_CH1_R[7:0]	**Gain setting for digital PGA channel 1 right when the device is used in the following two scenarios (4 channel device only, values from 0x28 to 0x37):** i. Analog PGA gain and digital PGA are set separately ii. Digital Microphone Interface is used (4-channel device only, when Manual Gain Mapping is enabled in register 0x19) Default value: 00000000 Specify 2s complement value with 7.1 format. 0010100_0: 0.0 dB 0010100_1: 0.5 dB 0010101_0: 1.0 dB 0010101_1: 1.5 dB

Copyright © 2014, Texas Instruments Incorporated

	. . . 0011111_1: 7.5 dB (Max) Others: Reserved

Page 0 / Register 23 (Hex 0x17)

Dec	Hex	b7	b6	b5	b4	b3	b2	b1	b0
23	0x17	DPGA_VAL_CH2_L7	DPGA_VAL_CH2_L6	DPGA_VAL_CH2_L5	DPGA_VAL_CH2_L4	DPGA_VAL_CH2_L3	DPGA_VAL_CH2_L2	DPGA_VAL_CH2_L1	DPGA_VAL_CH2_L0
Reset Value		0	0	0	0	0	0	0	0

DPGA_VAL_CH2_L[7:0]	**Gain setting for digital PGA channel 2 left (4-channel device only)** See Pg0, Reg 0x16 description Default value: 00000000 See Pg0, Reg 0x16 description

Page 0 / Register 24 (Hex 0x18)

Dec	Hex	b7	b6	b5	b4	b3	b2	b1	b0
24	0x18	DPGA_VAL_CH2_R7	DPGA_VAL_CH2_R6	DPGA_VAL_CH2_R5	DPGA_VAL_CH2_R4	DPGA_VAL_CH2_R3	DPGA_VAL_CH2_R2	DPGA_VAL_CH2_R1	DPGA_VAL_CH2_R0
Reset Value		0	0	0	0	0	0	0	0

DPGA_VAL_CH2_R[7:0]	**Gain setting for digital PGA channel 2 right (4-channel device only)** See Pg0, Reg 0x16 description Default value: 00000000 See Pg0, Reg 0x16 description

Page 0 / Register 25 (Hex 0x19)

Dec	Hex	b7	b6	b5	b4	b3	b2	b1	b0
25	0x19	DPGA_CH2_R	DPGA_CH2_L	DPGA_CH1_R	DPGA_CH1_L	APGA_CH2_R	APGA_CH2_L	APGA_CH1_R	APGA_CH1_L
Reset Value		0	0	0	0	0	0	0	0

DPGA_CH2_R	**DPGA Control Mapping (4-channel device only)** CH2_R channel (Note: Using manual gain mapping in the 2ch devices sets the digital gain to 0dB.) Default value: 0 0: Auto gain mapping (Default) 1: Manual gain mapping
DPGA_CH2_L	**DPGA Control Mapping (4-channel devices only)** Gain control mode for digital PGA of CH2_L channel Default value: 0 0: Auto gain mapping (Default) 1: Manual gain mapping
DPGA_CH1_R	**DPGA Control Mapping (4-channel device only)** Gain control mode for digital PGA of CH1_R channel Default value: 0 0: Auto gain mapping (Default) 1: Manual gain mapping
DPGA_CH1_L	**DPGA Control Mapping (4-channel device only)** Gain control mode for digital PGA of CH1_L channel Default value: 0 0: Auto gain mapping (Default)

Copyright © 2014, Texas Instruments Incorporated

	1: Manual gain mapping
APGA_CH2_R	**DPGA Control Mapping (4-channel device only)** Gain control mode for analog PGA of CH2_R channel Default value: 0 0: Auto gain mapping (Default) 1: Manual gain mapping
APGA_CH2_L	**DPGA Control Mapping (4-channel device only)** Gain control mode for analog PGA of CH2_L channel Default value: 0 0: Auto gain mapping (Default) 1: Manual gain mapping
APGA_CH1_R	**DPGA Control Mapping (4-channel device only)** Gain control mode for analog PGA of CH1_R channel Default value: 0 0: Auto gain mapping (Default) 1: Manual gain mapping
APGA_CH1_L	**DPGA Control Mapping (4-channel device only)** Gain control mode for analogPGA of CH1_L channel Default value: 0 0: Auto gain mapping (Default) 1: Manual gain mapping

Page 0 / Register 26 (Hex 0x1A)

Dec	Hex	b7	b6	b5	b4	b3	b2	b1	b0
26	0x1A	DIGMIC_IN1_SEL 1	DIGMIC_IN1_SEL 0	DIGMIC_IN0_SEL 1	DIGMIC_IN0_SEL 0	RSV	RSV	DIGMIC_4CH	DIGMIC_EN
Reset Value		0	0	0	0	0	0	0	0

RSV	**Reserved** Reserved. Do not access.
DIGMIC_IN1_SEL[1:0]	**Select which pin is used for digital mic data input for MIC1 interface (4CH device Only)** Default value: 00 00: GPIO0 (Default) 01: GPIO1 10: Invalid 11: Invalid
DIGMIC_IN0_SEL[1:0]	**Select which pin is used for digital mic data input for MIC0 interface** Default value: 00 00: GPIO0 (Default) 01: GPIO1 10: Invalid 11: Invalid
DIGMIC_4CH	**(4ch device only) Select if the second pair of filters will be used for digital Microphone as signal processing** Default value: 0 0: configured for analog ADC signal processing (Default) 1: configured for digital MIC signal processing
DIGMIC_EN	**Select if the first pair of filters will be used for digital Microphone as signal processing**

Copyright © 2014, Texas Instruments Incorporated

	Default value: 0 0: configured as analog ADC signal processing (Default) 1: configured as digital MIC signal processing

Page 0 / Register 27 (Hex 0x1B)

Dec	Hex	b7	b6	b5	b4	b3	b2	b1	b0
27	0x1B	RSV	RSV	1	0	RSV	RSV	DIN_RESAMP1	DIN_RESAMP0
Reset Value		0	0	0	0	0	0	0	0

RSV	**Reserved** Reserved. Do not access.
DIN_RESAMP[1:0]	**Resample DIN with internal BCK to avoid internal timing issue** Default value: 00 00: No resample (Default) 01: resample DIN with rising edge of BCK 10: resample DIN with falling edge of BCK 11: Not supported

Page 0 / Register 32 (Hex 0x20)

Dec	Hex	b7	b6	b5	b4	b3	b2	b1	b0
32	0x20	SCK_XI_SEL1	SCK_XI_SEL0	MST_SCK_SRC	MST_MODE	ADC_CLK_SRC	DSP2_CLK_SRC	DSP1_CLK_SRC	CLKDET_EN
Reset Value		0	0	0	0	0	0	0	1

SCK_XI_SEL[1:0]	**SCK/Xtal selection** SCK/Xtal selection Default value: 00 00: SCK or Xtal (Default) 01: SCK 10: Xtal 11: (Reserved)
MST_SCK_SRC	**Master-Mode SCK source select** Default value: 0 0: SCK or XI (Default) 1: BCK
MST_MODE	**Master/Slave selection** Default value: 0 0: Slave (Default) 1: Master
ADC_CLK_SRC	**ADC Clock Source selection. Ignored if CLKDET_EN = 1** Default value: 0 0: SCK (Default) 1: PLL
DSP2_CLK_SRC	**DSP2 Clock Source selection. Ignored if CLKDET_EN = 1** Default value: 0 0: SCK (Default) 1: PLL
DSP1_CLK_SRC	**DSP1 Clock Source selection. Ignored if CLKDET_EN = 1** Default value: 0

Copyright © 2014, Texas Instruments Incorporated

	0: SCK (Default) 1: PLL
CLKDET_EN	**Enable Auto Clock Detector Configuration** Default value: 1 0: Disable 1: Enable (Default)

Page 0 / Register 33 (Hex 0x21)

Dec	Hex	b7	b6	b5	b4	b3	b2	b1	b0
33	0x21	RSV	DIV_NUM6	DIV_NUM5	DIV_NUM4	DIV_NUM3	DIV_NUM2	DIV_NUM1	DIV_NUM0
Reset Value		0	0	0	0	0	0	0	1

RSV	**Reserved** Reserved. Do not access.
DIV_NUM[6:0]	**Set the DSP1 Clock Divider Value** Ignored if CLKDET_EN = 1 Default value: 0000001 0: 1 1: 1/2 2: 1/3 3: 1/4 : : 127: 1/128

Page 0 / Register 34 (Hex 0x22)

Dec	Hex	b7	b6	b5	b4	b3	b2	b1	b0
34	0x22	RSV	DIV_NUM6	DIV_NUM5	DIV_NUM4	DIV_NUM3	DIV_NUM2	DIV_NUM1	DIV_NUM0
Reset Value		0	0	0	0	0	0	0	1

RSV	**Reserved** Reserved. Do not access.
DIV_NUM[6:0]	**Set the DSP2 Clock Divider Value** Ignored if CLKDET_EN = 1 Default value: 0000001 0: 1 1: 1/2 2: 1/3 3: 1/4 : : 127: 1/128

Page 0 / Register 35 (Hex 0x23)

Dec	Hex	b7	b6	b5	b4	b3	b2	b1	b0
35	0x23	RSV	DIV_NUM6	DIV_NUM5	DIV_NUM4	DIV_NUM3	DIV_NUM2	DIV_NUM1	DIV_NUM0
Reset Value		0	0	0	0	0	0	1	1

Copyright © 2014, Texas Instruments Incorporated

RSV	**Reserved** Reserved. Do not access.
DIV_NUM[6:0]	**Set the ADC Clock Divider Value** Ignored if CLKDET_EN = 1 Default value: 0000011 0: 1 1: 1/2 2: 1/3 3: 1/4 : : 127: 1/128

Page 0 / Register 37 (Hex 0x25)

Dec	Hex	b7	b6	b5	b4	b3	b2	b1	b0
37	0x25	RSV	DIV_NUM6	DIV_NUM5	DIV_NUM4	DIV_NUM3	DIV_NUM2	DIV_NUM1	DIV_NUM0
Reset Value		0	0	0	0	0	1	1	1

RSV	**Reserved** Reserved. Do not access.
DIV_NUM[6:0]	**Set the PLL SCK Clock Divider value** Default value: 0000111 Divider value. 0: 1 1: 1/2 2: 1/3 3: 1/4 : : 7: 1/8 (Default) : : 127: 1/128

Page 0 / Register 38 (Hex 0x26)

Dec	Hex	b7	b6	b5	b4	b3	b2	b1	b0
38	0x26	RSV	DIV_NUM6	DIV_NUM5	DIV_NUM4	DIV_NUM3	DIV_NUM2	DIV_NUM1	DIV_NUM0
Reset Value		0	0	0	0	0	0	1	1

RSV	**Reserved** Reserved. Do not access.
DIV_NUM[6:0]	**Set the Master Clock (SCK) Divider value** Ratio of Master clock (SCK) to Bit Clock (BCK) Default value: 0000011 Divider value. 0: 1 1: 1/2 2: 1/3 3: 1/4

Copyright © 2014, Texas Instruments Incorporated

	: : 7: 1/8 (Default) : : 127: 1/128

Page 0 / Register 39 (Hex 0x27)

Dec	Hex	b7	b6	b5	b4	b3	b2	b1	b0
39	0x27	DIV_NUM7	DIV_NUM6	DIV_NUM5	DIV_NUM4	DIV_NUM3	DIV_NUM2	DIV_NUM1	DIV_NUM0
Reset Value		0	0	1	1	1	1	1	1

DIV_NUM[7:0]	**Set the Master SCK Clock Divider value** SCK to LRCK ratio in master mode Default value: 00111111 Divider value 0: 1 1: 1/2 2: 1/3 3: 1/4 : : 63: 1/64 (Default) : : 127: 1/128 . . . 255: 1/256

Page 0 / Register 40 (Hex 0x28)

Dec	Hex	b7	b6	b5	b4	b3	b2	b1	b0
40	0x28	RSV	RSV	RSV	LOCK	RSV	RSV	PLL_REF_SEL	PLL_EN
Reset Value		0	0	0	0	0	0	0	1

RSV	**Reserved** Reserved. Do not access.
LOCK	**PLL Lock Status** Default value: 0 0: Not locked 1: Locked
PLL_REF_SEL	**PLL Reference clock selection** Ignored if CLKDET_EN = 1 Default value: 0 0: SCK (Default) 1: BCK
PLL_EN	**Enable the PLL** Ignored if CLKDET_EN = 1 Default value: 1 0: Disable

Copyright © 2014, Texas Instruments Incorporated

	1: Enable (Default)

Page 0 / Register 41 (Hex 0x29)

Dec	Hex	b7	b6	b5	b4	b3	b2	b1	b0
41	0x29	RSV	P6	P5	P4	P3	P2	P1	P0
Reset Value		0	0	0	0	0	0	0	0

RSV	**Reserved** Reserved. Do not access.
P[6:0]	**PLL P-Divider value** Ignored if CLKDET_EN = 1 Default value: 0000000 0: 1 1: 1/2 2: 1/3 3: 1/4 : 127: 1/128

Page 0 / Register 42 (Hex 0x2A)

Dec	Hex	b7	b6	b5	b4	b3	b2	b1	b0
42	0x2A	RSV	RSV	RSV	RSV	R3	R2	R1	R0
Reset Value		0	0	0	0	0	0	0	0

RSV	**Reserved** Reserved. Do not access.
R[3:0]	**PLL R-Divider value** Ignored if CLKDET_EN = 1 Default value: 0000 0: 1 1: 1/2 2: 1/3 3: 1/4 : : 15: 1/16

Page 0 / Register 43 (Hex 0x2B)

Dec	Hex	b7	b6	b5	b4	b3	b2	b1	b0
43	0x2B	RSV	RSV	J5	J4	J3	J2	J1	J0
Reset Value		0	0	0	0	0	0	0	1

RSV	**Reserved** Reserved. Do not access.
J[5:0]	**Integer part of the PLL J.D-Divider value** Ignored if CLKDET_EN = 1 Default value: 000001 0: (Prohibit) 1: 1 2: 2

Copyright © 2014, Texas Instruments Incorporated

	: : 63: 63

Page 0 / Register 44 (Hex 0x2C)

Dec	Hex	b7	b6	b5	b4	b3	b2	b1	b0
44	0x2C	D_LSB7	D_LSB6	D_LSB5	D_LSB4	D_LSB3	D_LSB2	D_LSB1	D_LSB0
Reset Value		0	0	0	0	0	0	0	0

RSV	**Reserved** Reserved. Do not access.
D_LSB	**Fractional part of the PLL J.D-Divider value. (Least Significant Bits)** Ignored if CLKDET_EN = 1 Default value: 0 0: 0 1: 1 2: 2 3: 3 : : : 9999: 9999

Page 0 / Register 45 (Hex 0x2D)

Dec	Hex	b7	b6	b5	b4	b3	b2	b1	b0
45	0x2D	RSV	RSV	D_MSB5	D_MSB4	D_MSB3	D_MSB2	D_MSB1	D_MSB0
Reset Value				0	0	0	0	0	0

RSV	**Reserved** Reserved. Do not access.
D_MSB[5:0]	**Fractional part of the PLL J.D-Divider value. (Most Significant Bits, [13:8])** Ignored if CLKDET_EN = 1 Default value: 000000 0: 0 1: 1 2: 2 3: 3 : : : 9999: 9999

Page 0 / Register 48 (Hex 0x30)

Dec	Hex	b7	b6	b5	b4	b3	b2	b1	b0
48	0x30	CH4R	CH4L	CH3R	CH3L	CH2R	CH2L	CH1R	CH1L
Reset Value		0	0	0	0	0	0	0	0

Copyright © 2014, Texas Instruments Incorporated

CH4R	**SIGDET_CH_MODE** Select the signal detection mode for each channel in SLEEP Mode Default value: 0 0: Audio signal detection (Default) 1: DC level-change detection
CH4L	Default value: 0
CH3R	Default value: 0
CH3L	Default value: 0
CH2R	Default value: 0
CH2L	Default value: 0
CH1R	Default value: 0
CH1L	Default value: 0

Page 0 / Register 49 (Hex 0x31)

Dec	Hex	b7	b6	b5	b4	b3	b2	b1	b0
49	0x31	CH4R	CH4L	CH3R	CH3L	CH2R	CH2L	CH1R	CH1L
Reset Value		0	0	0	0	0	0	0	0

CH4R	**SIGDET_TRIG_MASK** Mask bits of the interrupt trigger. All channels are scanned, even if they are masked. Developers can ignore specific channels and prevent them from generating interrupts using this register. Default value: 0 0: No mask (Default) 1: Mask
CH4L	Default value: 0
CH3R	Default value: 0
CH3L	Default value: 0
CH2R	Default value: 0
CH2L	Default value: 0

Copyright © 2014, Texas Instruments Incorporated

CH1R	Default value: 0
CH1L	Default value: 0

Page 0 / Register 50 (Hex 0x32)

Dec	Hex	b7	b6	b5	b4	b3	b2	b1	b0
50	0x32	CH4R	CH4L	CH3R	CH3L	CH2R	CH2L	CH1R	CH1L
Reset Value		0	0	0	0	0	0	0	0

CH4R	**SIGDET_STAT** Status of the signal level detection In both Energysense and Controlsense modes (Read only) Default value: 0 [In the Audio Signal Detection Mode] a) In the Active/Run state 0: Signal active 1: Signal lost b) In the Sleep mode 0: Signal lost 1: Signal active [In Automatic Clipping Suppresion Mode] 0: No change. 1: changed DC level
CH4L	Default value: 0
CH3R	Default value: 0
CH3L	Default value: 0
CH2R	Default value: 0
CH2L	Default value: 0
CH1R	Default value: 0
CH1L	Default value: 0

Page 0 / Register 52 (Hex 0x34)

Dec	Hex	b7	b6	b5	b4	b3	b2	b1	b0
52	0x34	RSV	RSV	RSV	TIME4	TIME3	TIME2	TIME1	TIME0
Reset Value		0	0	0	0	0	0	0	0

Copyright © 2014, Texas Instruments Incorporated

RSV	**Reserved** Reserved. Do not access.
TIME[4:0]	**SIGDET_LOSS_TIME** If the signal drops below the threshold on the current audio input for this set amount of time, the device generates an interrupt. Default value: 00000 0: Prohibit 1: 1 minute (Default) 2: 2 minutes 3: 3 minutes : 30: 30 minutes (Max)

Page 0 / Register 53 (Hex 0x35)

Dec	Hex	b7	b6	b5	b4	b3	b2	b1	b0
53	0x35	RSV	RSV	RSV	RSV	RSV	TIME2	TIME1	TIME0
Reset Value		0	0	0	0	0	0	0	0

RSV	**Reserved** Reserved. Do not access.
TIME[2:0]	**SIGDET_SCAN_TIME** Configures the scan time for each channel in the SLEEP state Default value: 000 000: 160[msec] (Default) 001: 80[msec] 010: 40[msec] 011: 20[msec] 100: 10[msec] Others: Invalid

Page 0 / Register 54 (Hex 0x36)

Dec	Hex	b7	b6	b5	b4	b3	b2	b1	b0
54	0x36	RSV	RSV	RSV	RSV	RSV	INT_INTVL2	INT_INTVL1	INT_INTVL0
Reset Value		0	0	0	0	0	0	0	1

RSV	**Reserved** Reserved. Do not access.
INT_INTVL[2:0]	**SIGDET_INT_INTVL** Interval time of the signal detector interrupt when there is signal detection. This time value is used for Energysense wakeup from sleep interrupt and from Controlsense interrupts Default value: 001 Interval time of the signal-resume interrupt 000: No repeat 001: 1 sec (Default) 010: 2 sec 011: 3 sec 100: 4 sec Others: Invalid

Copyright © 2014, Texas Instruments Incorporated

Page 0 / Register 64 (Hex 0x40)

Dec	Hex	b7	b6	b5	b4	b3	b2	b1	b0
64	0x40	REF7	REF6	REF5	REF4	REF3	REF2	REF1	REF0
Reset Value		1	0	0	0	0	0	0	0

REF[7:0]	**SIGDET_DC_REF_CH1_L** Reference level of Controlsense detection Default value: 10000000 0x80: Default

Page 0 / Register 65 (Hex 0x41)

Dec	Hex	b7	b6	b5	b4	b3	b2	b1	b0
65	0x41	DIFF7	DIFF6	DIFF5	DIFF4	DIFF3	DIFF2	DIFF1	DIFF0
Reset Value		0	1	1	1	1	1	1	1

DIFF[7:0]	**SIGDET_DC_DIFF_CH1_L** Difference level of Controlsense detection Default value: 01111111 0x7F: Default

Page 0 / Register 66 (Hex 0x42)

Dec	Hex	b7	b6	b5	b4	b3	b2	b1	b0
66	0x42	LEVEL7	LEVEL6	LEVEL5	LEVEL4	LEVEL3	LEVEL2	LEVEL1	LEVEL0
Reset Value		0	0	0	0	0	0	0	0

LEVEL[7:0]	**10.7.3 SIGDET_DC_LEVEL_CH1_L** Current DC level Default value: 00000000

Page 0 / Register 67 (Hex 0x43)

Dec	Hex	b7	b6	b5	b4	b3	b2	b1	b0
67	0x43	REF7	REF6	REF5	REF4	REF3	REF2	REF1	REF0
Reset Value		1	0	0	0	0	0	0	0

REF[7:0]	**SIGDET_DC_REF_CH1_R** Reference level of Controlsense detection Default value: 10000000 0x80: Default

Page 0 / Register 68 (Hex 0x44)

Dec	Hex	b7	b6	b5	b4	b3	b2	b1	b0
68	0x44	DIFF7	DIFF6	DIFF5	DIFF4	DIFF3	DIFF2	DIFF1	DIFF0
Reset Value		0	1	1	1	1	1	1	1

DIFF[7:0]	**SIGDET_DC_DIFF_CH1_R** Difference level of Controlsense detection Default value: 01111111 0x7F: Default

Page 0 / Register 69 (Hex 0x45)

Dec	Hex	b7	b6	b5	b4	b3	b2	b1	b0
69	0x45	LEVEL7	LEVEL6	LEVEL5	LEVEL4	LEVEL3	LEVEL2	LEVEL1	LEVEL0
Reset Value		0	0	0	0	0	0	0	0

Copyright © 2014, Texas Instruments Incorporated

LEVEL[7:0]	**10.7.3 SIGDET_DC_LEVEL_CH1_R** Current DC level Default value: 00000000

Page 0 / Register 70 (Hex 0x46)

Dec	Hex	b7	b6	b5	b4	b3	b2	b1	b0
70	0x46	REF7	REF6	REF5	REF4	REF3	REF2	REF1	REF0
Reset Value		1	0	0	0	0	0	0	0

REF[7:0]	**SIGDET_DC_REF_CH2_L** Reference level of Controlsense detection Default value: 10000000 0x80: Default

Page 0 / Register 71 (Hex 0x47)

Dec	Hex	b7	b6	b5	b4	b3	b2	b1	b0
71	0x47	DIFF7	DIFF6	DIFF5	DIFF4	DIFF3	DIFF2	DIFF1	DIFF0
Reset Value		0	1	1	1	1	1	1	1

DIFF[7:0]	**SIGDET_DC_DIFF_CH2_L** Difference level of Controlsense detection Default value: 01111111 0x7F: Default

Page 0 / Register 72 (Hex 0x48)

Dec	Hex	b7	b6	b5	b4	b3	b2	b1	b0
72	0x48	LEVEL7	LEVEL6	LEVEL5	LEVEL4	LEVEL3	LEVEL2	LEVEL1	LEVEL0
Reset Value		0	0	0	0	0	0	0	0

LEVEL[7:0]	**10.7.3 SIGDET_DC_LEVEL_CH2_L** Current DC level Default value: 00000000

Page 0 / Register 73 (Hex 0x49)

Dec	Hex	b7	b6	b5	b4	b3	b2	b1	b0
73	0x49	REF7	REF6	REF5	REF4	REF3	REF2	REF1	REF0
Reset Value		1	0	0	0	0	0	0	0

REF[7:0]	**SIGDET_DC_REF_CH2_R** Reference level of Controlsense detection Default value: 10000000 0x80: Default

Page 0 / Register 74 (Hex 0x4A)

Dec	Hex	b7	b6	b5	b4	b3	b2	b1	b0
74	0x4A	DIFF7	DIFF6	DIFF5	DIFF4	DIFF3	DIFF2	DIFF1	DIFF0
Reset Value		0	1	1	1	1	1	1	1

DIFF[7:0]	**SIGDET_DC_DIFF_CH2_R** Difference level of Controlsense detection Default value: 01111111 0x7F: Default

Copyright © 2014, Texas Instruments Incorporated

Page 0 / Register 75 (Hex 0x4B)

Dec	Hex	b7	b6	b5	b4	b3	b2	b1	b0
75	0x4B	LEVEL7	LEVEL6	LEVEL5	LEVEL4	LEVEL3	LEVEL2	LEVEL1	LEVEL0
Reset Value		0	0	0	0	0	0	0	0

LEVEL[7:0]	**10.7.3 SIGDET_DC_LEVEL_CH2_R** Current DC level Default value: 00000000

Page 0 / Register 76 (Hex 0x4C)

Dec	Hex	b7	b6	b5	b4	b3	b2	b1	b0
76	0x4C	REF7	REF6	REF5	REF4	REF3	REF2	REF1	REF0
Reset Value		1	0	0	0	0	0	0	0

REF[7:0]	**SIGDET_DC_REF_CH3_L** Reference level of Controlsense detection Default value: 10000000 0x80: Default

Page 0 / Register 77 (Hex 0x4D)

Dec	Hex	b7	b6	b5	b4	b3	b2	b1	b0
77	0x4D	DIFF7	DIFF6	DIFF5	DIFF4	DIFF3	DIFF2	DIFF1	DIFF0
Reset Value		0	1	1	1	1	1	1	1

DIFF[7:0]	**SIGDET_DC_DIFF_CH3_L** Difference level of Controlsense detection Default value: 01111111 0x7F: Default

Page 0 / Register 78 (Hex 0x4E)

Dec	Hex	b7	b6	b5	b4	b3	b2	b1	b0
78	0x4E	LEVEL7	LEVEL6	LEVEL5	LEVEL4	LEVEL3	LEVEL2	LEVEL1	LEVEL0
Reset Value		0	0	0	0	0	0	0	0

LEVEL[7:0]	**10.7.3 SIGDET_DC_LEVEL_CH3_L** Current DC level Default value: 00000000

Page 0 / Register 79 (Hex 0x4F)

Dec	Hex	b7	b6	b5	b4	b3	b2	b1	b0
79	0x4F	REF7	REF6	REF5	REF4	REF3	REF2	REF1	REF0
Reset Value		1	0	0	0	0	0	0	0

REF[7:0]	**SIGDET_DC_REF_CH3_R** Reference level of Controlsense detection Default value: 10000000 0x80: Default

Page 0 / Register 80 (Hex 0x50)

Dec	Hex	b7	b6	b5	b4	b3	b2	b1	b0
80	0x50	DIFF7	DIFF6	DIFF5	DIFF4	DIFF3	DIFF2	DIFF1	DIFF0
Reset Value		0	1	1	1	1	1	1	1

Copyright © 2014, Texas Instruments Incorporated

DIFF[7:0]	**SIGDET_DC_DIFF_CH3_R** Difference level of Controlsense detection Default value: 01111111 0x7F: Default

Page 0 / Register 81 (Hex 0x51)

Dec	Hex	b7	b6	b5	b4	b3	b2	b1	b0
81	0x51	LEVEL7	LEVEL6	LEVEL5	LEVEL4	LEVEL3	LEVEL2	LEVEL1	LEVEL0
Reset Value		0	0	0	0	0	0	0	0

LEVEL[7:0]	**10.7.3 SIGDET_DC_LEVEL_CH3_R** Current DC level Default value: 00000000

Page 0 / Register 82 (Hex 0x52)

Dec	Hex	b7	b6	b5	b4	b3	b2	b1	b0
82	0x52	REF7	REF6	REF5	REF4	REF3	REF2	REF1	REF0
Reset Value		1	0	0	0	0	0	0	0

REF[7:0]	**SIGDET_DC_REF_CH4_L** Reference level of Controlsense detection Default value: 10000000 0x80: Default

Page 0 / Register 83 (Hex 0x53)

Dec	Hex	b7	b6	b5	b4	b3	b2	b1	b0
83	0x53	DIFF7	DIFF6	DIFF5	DIFF4	DIFF3	DIFF2	DIFF1	DIFF0
Reset Value		0	1	1	1	1	1	1	1

DIFF[7:0]	**SIGDET_DC_DIFF_CH4_L** Difference level of Controlsense detection Default value: 01111111 0x7F: Default

Page 0 / Register 84 (Hex 0x54)

Dec	Hex	b7	b6	b5	b4	b3	b2	b1	b0
84	0x54	LEVEL7	LEVEL6	LEVEL5	LEVEL4	LEVEL3	LEVEL2	LEVEL1	LEVEL0
Reset Value		0	0	0	0	0	0	0	0

LEVEL[7:0]	**10.7.3 SIGDET_DC_LEVEL_CH4_L** Current DC level Default value: 00000000

Page 0 / Register 85 (Hex 0x55)

Dec	Hex	b7	b6	b5	b4	b3	b2	b1	b0
85	0x55	REF7	REF6	REF5	REF4	REF3	REF2	REF2	REF0
Reset Value		1	0	0	0	0	0	0	0

REF[7:0]	**SIGDET_DC_REF_CH4_R** Reference level of Controlsense detection Default value: 10000000 0x80: Default

Copyright © 2014, Texas Instruments Incorporated

Page 0 / Register 86 (Hex 0x56)

Dec	Hex	b7	b6	b5	b4	b3	b2	b1	b0
86	0x56	DIFF7	DIFF6	DIFF5	DIFF4	DIFF3	DIFF2	DIFF1	DIFF0
Reset Value		0	1	1	1	1	1	1	1

DIFF[7:0]	**SIGDET_DC_DIFF_CH4_R** Difference level of Controlsense detection Default value: 01111111 0x7F: Default

Page 0 / Register 87 (Hex 0x57)

Dec	Hex	b7	b6	b5	b4	b3	b2	b1	b0
87	0x57	LEVEL7	LEVEL6	LEVEL5	LEVEL4	LEVEL3	LEVEL2	LEVEL1	LEVEL0
Reset Value		0	0	0	0	0	0	0	0

LEVEL[7:0]	**10.7.3 SIGDET_DC_LEVEL_CH4_R** Current DC level Default value: 00000000

Page 0 / Register 88 (Hex 0x58)

Dec	Hex	b7	b6	b5	b4	b3	b2	b1	b0
88	0x58	DC_NOLATCH	AUXADC_RDY	DC_RDY	AUXADC_LATCH	AUXADC_DATA_TYPE	DC_CH2	DC_CH1	DC_CH0
Reset Value		0	0	0	0	0	0	0	0

DC_NOLATCH	**AUXADC_DATA_CTRL** Read Directly without latch operation (from secondary ADC) Default value: 0 0: With latch operation 1: Without latch operation when read DC value
AUXADC_RDY	**Indicate the latch operation is finished and AUXADC value is ready for read operation** Default value: 0 0: Latch operation is running 1: AUXADC value is ready for read operation
DC_RDY	**Indicate the latch operation is finished and DC value is ready** Default value: 0 0: Latch operation is running 1: DC value is ready for read operation
AUXADC_LATCH	**Trigger to latch 16-bit AUXADC value for read operation: Rising edge is the trigger signal** Default value: 0 0: Idle 1: Latch the value for read operation
AUXADC_DATA_TYPE	**Data to be read from Control Interface** Default value: 0 0: read LPF data 1: read HPF data
DC_CH[2:0]	**Select DC-value channel to be latched for control-interface read operation** Default value: 000 000: CH1_L

Copyright © 2014, Texas Instruments Incorporated

	001: CH1_R 010: CH2_L 011: CH2_R 100: CH3_L 101: CH3_R 110: CH4_L 111: CH4_R

Page 0 / Register 89 (Hex 0x59)

Dec	Hex	b7	b6	b5	b4	b3	b2	b1	b0
89	0x59	AUXADC_DATA_LSB7	AUXADC_DATA_LSB6	AUXADC_DATA_LSB5	AUXADC_DATA_LSB4	AUXADC_DATA_LSB3	AUXADC_DATA_LSB2	AUXADC_DATA_LSB1	AUXADC_DATA_LSB0
Reset Value		0	0	0	0	0	0	0	0

AUXADC_DATA_LSB[7:0]	**Low byte of Secondary ADC output [7:0]** The data depends on AUXADC_DATA_TYPE setting AUXADC_DATA_TYPE = 0: reading LPF of secondary ADC AUXADC_DATA_TYPE = 1: reading HPF of secondary ADC Default value: 00000000

Page 0 / Register 90 (Hex 0x5A)

Dec	Hex	b7	b6	b5	b4	b3	b2	b1	b0
90	0x5A	AUXADC_DATA_MSB7	AUXADC_DATA_MSB6	AUXADC_DATA_MSB5	AUXADC_DATA_MSB4	AUXADC_DATA_MSB3	AUXADC_DATA_MSB2	AUXADC_DATA_MSB1	AUXADC_DATA_MSB0
Reset Value		0	0	0	0	0	0	0	0

AUXADC_DATA_MSB[7:0]	**High byte of Secondary ADC output [15:8]** The data depends on AUXADC_DATA_TYPE setting AUXADC_DATA_TYPE = 0: reading LPF of secondary ADC AUXADC_DATA_TYPE = 1: reading HPF of secondary ADC Default value: 00000000

Page 0 / Register 96 (Hex 0x60)

Dec	Hex	b7	b6	b5	b4	b3	b2	b1	b0
96	0x60	RSV	RSV	RSV	POSTPGA_CP	CLKERR	DC_CHANG	DIN_TOGGLE	ENGSTR
Reset Value		0	0	0	0	0	0	0	1

RSV	**Reserved** Reserved. Do not access.
POSTPGA_CP	**Write 0 to clear interrupts, all bits in this register** Enable the Post-PGA Clipping Interrupt Default value: 0 0: Disable (Default) 1: Enable
CLKERR	**Enable the Clock Error Interrupt** Default value: 0 0: Disable (Default) 1: Enable
DC_CHANG	**Enable the DC Level Change Interrupt** Default value: 0 0: Disable (Default) 1: Enable

Copyright © 2014, Texas Instruments Incorporated

DIN_TOGGLE	**Enable I2S RX DIN toggle Interrupt** Default value: 0 0: Disable (Default) 1: Enable
ENGSTR	**Enable the Energysense Interrupt** Default value: 1 0: Disable 1: Enable (Default)

Page 0 / Register 97 (Hex 0x61)

Dec	Hex	b7	b6	b5	b4	b3	b2	b1	b0
97	0x61	RSV	RSV	RSV	POSTPGA_CP	CLKERR	DC_CHANG	DIN_TOGGLE	ENGSTR
Reset Value		0	0	0	0	0	0	0	0

RSV	**Reserved** Reserved. Do not access.
POSTPGA_CP	**Write 0 to register 0x60 clear interrupts, all bits in this register** Status of Post-PGA Clipping Interrupt Default value: 0 0: None 1: Interrupt Occurred Status is cleared by writing a 0 to register 0x60 - all bits in this register
CLKERR	**Status of the Clock Error Interrupt** Default value: 0 0: None 1: Interrupt Occurred
DC_CHANG	**Status of the DC Level Change Interrupt** Default value: 0 0: None 1: Interrupt Occurred
DIN_TOGGLE	**Status of I2S RX DIN toggle Interrupt** Default value: 0 0: None 1: Interrupt Occurred
ENGSTR	**Status of the Energysense Interrupt** Default value: 0 0: None 1: Interrupt Occurred

Page 0 / Register 98 (Hex 0x62)

Dec	Hex	b7	b6	b5	b4	b3	b2	b1	b0
98	0x62	RSV	RSV	POL1	POL0	RSV	RSV	WIDTH1	WIDTH0
Reset Value		0	0	0	1	0	0	0	0

Copyright © 2014, Texas Instruments Incorporated

RSV	**Reserved** Reserved. Do not access.
POL[1:0]	**Polarity of the interrupt pulse** Default value: 01 00: Low Active 01: High Active (Default) 10: Open Drain (L-Active) 11: Reserved
WIDTH[1:0]	**Width of the interrupt pulse** Default value: 00 00: 1 msec(Default) 01: 2 msec 10: 3 msec 11: Infinity for level sense

Page 0 / Register 112 (Hex 0x70)

Dec	Hex	b7	b6	b5	b4	b3	b2	b1	b0
112	0x70	RSV	RSV	RSV	RSV	RSV	PWRDN	SLEEP	STBY
Reset Value		0	1	1	1	0	0	0	0

RSV	**Reserved** Reserved. Do not access.
PWRDN	**Enter Analog Power Down state** Default value: 0 0: Power Up (Default) 1: Power Down
SLEEP	**Enter the Device Sleep state, once the chip goes into SLEEP state, Energysense application will be triggered.** Default value: 0 0: Power Up (Default) 1: Sleep
STBY	**Enter Digital Stand-by state** Default value: 0 0: Run (Default) 1: Stand-by

Page 0 / Register 113 (Hex 0x71)

Dec	Hex	b7	b6	b5	b4	b3	b2	b1	b0
113	0x71	2CH	RSV	FLT	HPF_EN	MUTE_CH2_R	MUTE_CH2_L	MUTE_CH1_R	MUTE_CH1_L
Reset Value		0	0	0	1	0	0	0	0

RSV	**Reserved** Reserved. Do not access.
2CH	**DSP_CTRL** Select the processing mode for 4 channel device only. This configuration CANNOT be changed 'on the fly' in RUN state. Default value: 0 0: 4 channels (Default)

Copyright © 2014, Texas Instruments Incorporated

	1: 2 channels
FLT	**Select the decimation filter type** Default value: 0 0: Normal (Default) 1: Short Latency
HPF_EN	**Enable high-pass filter** Default value: 1 0: Disable 1: Enable (Default)
MUTE_CH2_R	**Mute Ch2(R)** Default value: 0 0: Unmute (Default) 1: Mute
MUTE_CH2_L	**Mute Ch2(L)** Default value: 0 0: Unmute (Default) 1: Mute
MUTE_CH1_R	**Mute Ch1(R)** Default value: 0 0: Unmute (Default) 1: Mute
MUTE_CH1_L	**Mute Ch1(L)** Default value: 0 0: Unmute (Default) 1: Mute

Page 0 / Register 114 (Hex 0x72)

Dec	Hex	b7	b6	b5	b4	b3	b2	b1	b0
114	0x72	RSV	RSV	RSV	RSV	STATE3	STATE2	STATE1	STATE0
Reset Value		0	0	0	0	0	0	0	0

RSV	**Reserved** Reserved. Do not access.
STATE[3:0]	**Device Current Status** Current Power State of the device Default value: 0000 0000: Power Down 0001: Wait clock stable 0010: Release reset 0011: Stand-by 0100: Fade IN 0101: Fade OUT 0110: (Reserved) 0111: (Reserved) 1000: (Reserved) 1001: (Sleep)

Copyright © 2014, Texas Instruments Incorporated

	1010: (Reserved)) 1011: (Reserved) 1100: (Reserved) 1101: (Reserved) 1110: (Reserved) 1111: Run

Page 0 / Register 115 (Hex 0x73)

Dec	Hex	b7	b6	b5	b4	b3	b2	b1	b0
115	0x73	RSV	RSV	RSV	RSV	RSV	INFO2	INFO1	INFO0
Reset Value		0	0	0	0	0	0	0	0

RSV	**Reserved** Reserved. Do not access.
INFO[2:0]	**Current Sampling Frequency** Default value: 000 000: Out of range (Low) or LRCK Halt 001: 8kHz 010: 16kHz 011: 32-48kHz 100: 88.2-96kHz 101: 176.4-192kHz 110: Out of range (High) 111: Invalid Fs

Page 0 / Register 116 (Hex 0x74)

Dec	Hex	b7	b6	b5	b4	b3	b2	b1	b0
116	0x74	RSV	BCK_RATIO2	BCK_RATIO1	BCK_RATIO0	RSV	SCK_RATIO2	SCK_RATIO1	SCK_RATIO0
Reset Value		0	0	0	0	0	0	0	0

RSV	**Reserved** Reserved. Do not access.
BCK_RATIO[2:0]	**Current receiving BCK ratio** Default value: 000 000: Out of range (L) or BCK Halt 001: 32 010: 48 011: 64 100: 256 101: (Not assigned) 110: Out of range (H) 111: Invalid BCK ratio or LRCK Halt
SCK_RATIO[2:0]	**Current SCK Ratio** Default value: 000 000: Out of range (L) or SCK Halt 001: 128 010: 256 011: 384 100: 512 101: 768

Copyright © 2014, Texas Instruments Incorporated

	110: Out of range (H) 111: Invalid SCK ratio or LRCK Halt

Page 0 / Register 117 (Hex 0x75)

Dec	Hex	b7	b6	b5	b4	b3	b2	b1	b0
117	0x75	RSV	LRCKHLT	BCKHLT	SCKHTL	RSV	LRCKERR	BCKERR	SCKERR
Reset Value		0	0	0	0	0	0	0	0

RSV	**Reserved** Reserved. Do not access.
LRCKHLT	**CLK_ERR_STAT** LRCK Halt Status Default value: 0 0: No Error 1: Halt
BCKHLT	**BCK Halt Status** Default value: 0 0: No Error 1: Halt
SCKHTL	**SCK Halt Status** Default value: 0 0: No Error 1: Halt
LRCKERR	**LRCK Error Status** Default value: 0 0: No Error 1: Error
BCKERR	**BCK Error Status** Default value: 0 0: No Error 1: Error
SCKERR	**SCK Error Status** Default value: 0 0: No Error 1: Error

Page 0 / Register 120 (Hex 0x78)

Dec	Hex	b7	b6	b5	b4	b3	b2	b1	b0
120	0x78	RSV	RSV	RSV	RSV	RSV	DVDD	AVDD	LDO
Reset Value		0	0	0	0	0	0	0	0

RSV	**Reserved** Reserved. Do not access.
DVDD	**DVDD Status** Default value: 0 0:Bad/Missing 1:Good

Copyright © 2014, Texas Instruments Incorporated

AVDD	**AVDD Status** Default value: 0 0:Bad/Missing 1:Good
LDO	**Digital LDO Status** Default value: 0 0:Bad/Missing 1:Good

14.2.3 Page 1 Registers

Page 1 / Register 1 (Hex 0x01)

Dec	Hex	b7	b6	b5	b4	b3	b2	b1	b0
1	0x01	RSV	RSV	RSV	DONE	RSV	BUSY	R_REQ	W_REQ
Reset Value		0	0	0	1	0	1	1	1

RSV	**Reserved** Reserved. Do not access.
DONE	Default value: 1 1: Access done 0: Accessing now
BUSY	Default value: 1 1: Access ready 0: Busy
R_REQ	**Memory Mapper Register Access to DSP-2 - READ** Default value: 1 1: Access ready 0: Busy
W_REQ	**Memory Mapper Register Access to DSP-2 - WRITE** Default value: 1 1: Access ready 0: Busy

Page 1 / Register 2 (Hex 0x02)

Dec	Hex	b7	b6	b5	b4	b3	b2	b1	b0
2	0x02	RSV	MEM_ADDR[6:0]6	MEM_ADDR[6:0]5	MEM_ADDR[6:0]4	MEM_ADDR[6:0]3	MEM_ADDR[6:0]2	MEM_ADDR[6:0]1	MEM_ADDR[6:0]0
Reset Value		0	0	0	0	0	0	0	0

RSV	**Reserved** Reserved. Do not access.
MEM_ADDR[6:0][6:0]	**Memory Mapped Register Address** Status of the memory mapped register access Default value: 0000000

Copyright © 2014, Texas Instruments Incorporated

Page 1 / Register 4 (Hex 0x04)

Dec	Hex	b7	b6	b5	b4	b3	b2	b1	b0
4	0x04	MEM_WDATA_07	MEM_WDATA_06	MEM_WDATA_05	MEM_WDATA_04	MEM_WDATA_03	MEM_WDATA_02	MEM_WDATA_01	MEM_WDATA_00
Reset Value		0	0	0	0	0	0	0	0

MEM_WDATA_0 [7:0]	**Write Data to 24bit memory[23:16]** COEFFICIENT [23:16] Default value: 00000000

Page 1 / Register 5 (Hex 0x05)

Dec	Hex	b7	b6	b5	b4	b3	b2	b1	b0
5	0x05	MEM_WDATA_17	MEM_WDATA_16	MEM_WDATA_15	MEM_WDATA_14	MEM_WDATA_13	MEM_WDATA_12	MEM_WDATA_11	MEM_WDATA_10
Reset Value		0	0	0	0	0	0	0	0

MEM_WDATA_1[7:0]	**Write Data to 24bit memory - [15:8]** COEFFICIENT [15:8] Default value: 00000000

Page 1 / Register 6 (Hex 0x06)

Dec	Hex	b7	b6	b5	b4	b3	b2	b1	b0
6	0x06	MEM_WDATA_27	MEM_WDATA_26	MEM_WDATA_25	MEM_WDATA_24	MEM_WDATA_23	MEM_WDATA_22	MEM_WDATA_21	MEM_WDATA_20
Reset Value		0	0	0	0	0	0	0	0

MEM_WDATA_2[7:0]	**Write Data to 24bit memory - [7:0]** COEFFICIENT [7:0] Default value: 00000000

Page 1 / Register 7 (Hex 0x07)

Dec	Hex	b7	b6	b5	b4	b3	b2	b1	b0
7	0x07	MEM_WDATA_3	RSV	RSV	RSV	RSV	RSV	RSV	RSV
Reset Value		0	0	0	0	0	0	0	0

RSV	**Reserved** Reserved. Do not access.
MEM_WDATA_3	**Write Data to 24bit memory - Reserved** RESERVED

Page 1 / Register 8 (Hex 0x08)

Dec	Hex	b7	b6	b5	b4	b3	b2	b1	b0
8	0x08	MEM_RDATA_07	MEM_RDATA_06	MEM_RDATA_05	MEM_RDATA_04	MEM_RDATA_03	MEM_RDATA_02	MEM_RDATA_01	MEM_RDATA_00
Reset Value		0	0	0	0	0	0	0	0

MEM_RDATA_0 [7:0]	**Read Data from 24bit memory[23:16]** COEFFICIENT [23:16] Default value: 00000000

Page 1 / Register 9 (Hex 0x09)

Dec	Hex	b7	b6	b5	b4	b3	b2	b1	b0
9	0x09	MEM_RDATA_17	MEM_RDATA_16	MEM_RDATA_15	MEM_RDATA_14	MEM_RDATA_13	MEM_RDATA_12	MEM_RDATA_11	MEM_RDATA_10
Reset Value		0	0	0	0	0	0	0	0

Copyright © 2014, Texas Instruments Incorporated

MEM_RDATA_1[7:0]	**Read Data from 24bit memory - [15:8]** COEFFICIENT [15:8] Default value: 00000000

Page 1 / Register 10 (Hex 0x0A)

Dec	Hex	b7	b6	b5	b4	b3	b2	b1	b0
10	0x0A	MEM_RDATA_27	MEM_RDATA_26	MEM_RDATA_25	MEM_RDATA_24	MEM_RDATA_23	MEM_RDATA_22	MEM_RDATA_21	MEM_RDATA_20
Reset Value		0	0	0	0	0	0	0	0

MEM_RDATA_2[7:0]	**Read Data from 24bit memory - [7:0]** COEFFICIENT [7:0] Default value: 00000000

Page 1 / Register 11 (Hex 0x0B)

Dec	Hex	b7	b6	b5	b4	b3	b2	b1	b0
11	0x0B	MEM_RDATA_3	RSV	RSV	RSV	RSV	RSV	RSV	RSV
Reset Value									

RSV	**Reserved** Reserved. Do not access.
MEM_RDATA_3	**Read Data from 24bit memory - Reserved** RESERVED

14.2.4 Page 3 Registers

Page 3 / Register 18 (Hex 0x12)

Dec	Hex	b7	b6	b5	b4	b3	b2	b1	b0
18	0x12	RSV	RSV	RSV	RSV	RSV	RSV	RSV	PD
Reset Value									0

RSV	**Reserved** Reserved. Do not access.
PD	Oscillator Power Down Control Default value: 0 0: Power up (Default) 1: Power down

Page 3 / Register 21 (Hex 0x15)

Dec	Hex	b7	b6	b5	b4	b3	b2	b1	b0
21	0x15	RSV	RSV	RSV	TERM	RSV	RSV	RSV	PDZ
Reset Value		0	0	0	0	0	0	0	1

RSV	**Reserved** Reserved. Do not access.
TERM	**Mic Bias Control** Mic bias resistor bypass (Write only) Default value: 0 0: Disable (Default) 1: Enable
PDZ	**Mic Bias Control**

Copyright © 2014, Texas Instruments Incorporated

	Mic bias control (Write only) Default value: 1 0: Power down 1: Power up (Default)

14.2.5 Page 253 Registers

Page 253 / Register 20 (Hex 0x14)

Dec	Hex	b7	b6	b5	b4	b3	b2	b1	b0
20	0x14	PGA_ICI1	PGA_ICI0	REF_ICI1	REF_ICI0	RSV	RSV	RSV	RSV
Reset Value		0	0	0	0	0	0	0	0

RSV	**Reserved** Reserved. Do not access.
PGA_ICI[1:0]	**PGA_ICI** PGA bias current trim Default value: 00 00: 100% (default) 01: Reserved 10: 75% 11: Reserved
REF_ICI[1:0]	 Global bias current trim Default value: 00 00: 100% (default) 01: 75% 10: Reserved 11: Reserved

14.3 Programming DSP Coefficients

The two fixed function DSPs on chip can have coefficients for filters and mixers programmed to them. This is done indirectly using specific registers on Page 1 (see Register map). See SLAC663 for more details.

The internal DSP coefficient memory space is mapped as follows:

Table 21. Virtual 24bit DSP Coefficient Registers

	Coefficient	Address	Description
Mixer-1	MIX1_CH1L	0x00	4.20 Format
	MIX1_CH1R	0x01	
	MIX1_CH2L	0x02	
	MIX1_CH2R	0x03	
	MIX1_I2SL	0x04	
	MIX1_I2SR	0x05	
Mixer-2	MIX2_CH1L	0x06	
	MIX2_CH1R	0x07	
	MIX2_CH2L	0x08	
	MIX2_CH2R	0x09	
	MIX2_I2SL	0x0A	
	MIX2_I2SR	0x0B	
Mixer-3	MIX3_CH1L	0x0C	
	MIX3_CH1R	0x0D	

Copyright © 2014, Texas Instruments Incorporated

Programming DSP Coefficients (continued)

Table 21. Virtual 24bit DSP Coefficient Registers (continued)

	Coefficient	Address	Description
	MIX3_CH2L	0x0E	
	MIX3_CH2R	0x0F	
	MIX3_I2SL	0x10	
	MIX3_I2SR	0x11	
Mixer-4	MIX4_CH1L	0x12	
	MIX4_CH1R	0x13	
	MIX4_CH2L	0x14	
	MIX4_CH2R	0x15	
	MIX4_I2SL	0x16	
	MIX4_I2SR	0x17	
Secondary ADCLPF/HPF	LPF_B0	0x20	1.23 Format
Coefficients	LPF_B1	0x21	
	LPF_B2	0x22	
	LPF_A1	0x23	
	LPF_A2	0x24	
	HPF_B0	0x25	
	HPF_B1	0x26	
	HPF_B2	0x27	
	HPF_A1	0x28	
	HPF_A2	0x29	
Energysense	Loss_threshold	0x2C	1.23 Format
Energysense	Resume_threshold	0x2D	

An example of how to write to these registers is shown below

For example, change the Energysense resume threshold value to -30 dB (0x040C37)

Write 0x00 0x01 ; # change to register bank 1

Read 0x01 # if value is 0x17 then continue (check if system is still writing/reading)

Write 0x02 0x2D ; # write the memory address of resume threshold

Write 0x04 0x04 ; # bit[23:15]

Write 0x05 0x0C ; # bit[15:8]

Write 0x06 0x37 ; # bit[7:0]

Write 0x01 0x01 ; # execute write operation

Write 0x00 0x01 ; # Dummy write to latch data from register space to internal DSP memory space

Copyright © 2014, Texas Instruments Incorporated

15 Device and Documentation Support

15.1 Development Support

See the PCM1865-Q1 EVM User's Guide, SLAU559

15.2 Trademarks

Bluetooth is a registered trademark of Bluetooth SIG, Inc..
All other trademarks are the property of their respective owners.

15.3 Electrostatic Discharge Caution

This integrated circuit can be damaged by ESD. Texas Instruments recommends that all integrated circuits be handled with appropriate precautions. Failure to observe proper handling and installation procedures can cause damage.

ESD damage can range from subtle performance degradation to complete device failure. Precision integrated circuits may be more susceptible to damage because very small parametric changes could cause the device not to meet its published specifications.

15.4 Glossary

SLYZ022 — *TI Glossary*.

This glossary lists and explains terms, acronyms, and definitions.

16 Mechanical, Packaging, and Orderable Information

The following packaging information and addendum reflect the most current data available for the designated devices. This data is subject to change without notice and revision of this document.

Copyright © 2014, Texas Instruments Incorporated

PACKAGING INFORMATION

Orderable Device	Status (1)	Package Type	Package Drawing	Pins	Package Qty	Eco Plan (2)	Lead/Ball Finish (6)	MSL Peak Temp (3)	Op Temp (°C)	Device Marking (4/5)	Samples
PCM1865QDBTRQ1	ACTIVE	TSSOP	DBT	30	2000	Green (RoHS & no Sb/Br)	CU NIPDAU	Level-2-260C-1 YEAR	-40 to 125	PCM1865Q1	Samples

(1) The marketing status values are defined as follows:
ACTIVE: Product device recommended for new designs.
LIFEBUY: TI has announced that the device will be discontinued, and a lifetime-buy period is in effect.
NRND: Not recommended for new designs. Device is in production to support existing customers, but TI does not recommend using this part in a new design.
PREVIEW: Device has been announced but is not in production. Samples may or may not be available.
OBSOLETE: TI has discontinued the production of the device.

(2) Eco Plan - The planned eco-friendly classification: Pb-Free (RoHS), Pb-Free (RoHS Exempt), or Green (RoHS & no Sb/Br) - please check http://www.ti.com/productcontent for the latest availability information and additional product content details.
TBD: The Pb-Free/Green conversion plan has not been defined.
Pb-Free (RoHS): TI's terms "Lead-Free" or "Pb-Free" mean semiconductor products that are compatible with the current RoHS requirements for all 6 substances, including the requirement that lead not exceed 0.1% by weight in homogeneous materials. Where designed to be soldered at high temperatures, TI Pb-Free products are suitable for use in specified lead-free processes.
Pb-Free (RoHS Exempt): This component has a RoHS exemption for either 1) lead-based flip-chip solder bumps used between the die and package, or 2) lead-based die adhesive used between the die and leadframe. The component is otherwise considered Pb-Free (RoHS compatible) as defined above.
Green (RoHS & no Sb/Br): TI defines "Green" to mean Pb-Free (RoHS compatible), and free of Bromine (Br) and Antimony (Sb) based flame retardants (Br or Sb do not exceed 0.1% by weight in homogeneous material)

(3) MSL, Peak Temp. - The Moisture Sensitivity Level rating according to the JEDEC industry standard classifications, and peak solder temperature.

(4) There may be additional marking, which relates to the logo, the lot trace code information, or the environmental category on the device.

(5) Multiple Device Markings will be inside parentheses. Only one Device Marking contained in parentheses and separated by a "~" will appear on a device. If a line is indented then it is a continuation of the previous line and the two combined represent the entire Device Marking for that device.

(6) Lead/Ball Finish - Orderable Devices may have multiple material finish options. Finish options are separated by a vertical ruled line. Lead/Ball Finish values may wrap to two lines if the finish value exceeds the maximum column width.

Important Information and Disclaimer: The information provided on this page represents TI's knowledge and belief as of the date that it is provided. TI bases its knowledge and belief on information provided by third parties, and makes no representation or warranty as to the accuracy of such information. Efforts are underway to better integrate information from third parties. TI has taken and continues to take reasonable steps to provide representative and accurate information but may not have conducted destructive testing or chemical analysis on incoming materials and chemicals. TI and TI suppliers consider certain information to be proprietary, and thus CAS numbers and other limited information may not be available for release.

In no event shall TI's liability arising out of such information exceed the total purchase price of the TI part(s) at issue in this document sold by TI to Customer on an annual basis.

OTHER QUALIFIED VERSIONS OF PCM1865-Q1 :

- Catalog: PCM1865

NOTE: Qualified Version Definitions:

- Catalog - TI's standard catalog product

TAPE AND REEL INFORMATION

REEL DIMENSIONS

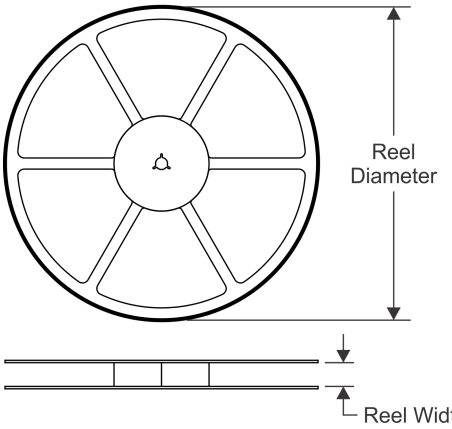

TAPE DIMENSIONS

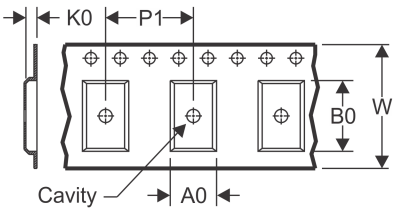

A0	Dimension designed to accommodate the component width
B0	Dimension designed to accommodate the component length
K0	Dimension designed to accommodate the component thickness
W	Overall width of the carrier tape
P1	Pitch between successive cavity centers

QUADRANT ASSIGNMENTS FOR PIN 1 ORIENTATION IN TAPE

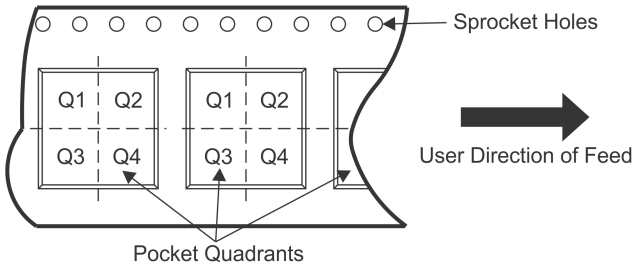

*All dimensions are nominal

Device	Package Type	Package Drawing	Pins	SPQ	Reel Diameter (mm)	Reel Width W1 (mm)	A0 (mm)	B0 (mm)	K0 (mm)	P1 (mm)	W (mm)	Pin1 Quadrant
PCM1865QDBTRQ1	TSSOP	DBT	30	2000	330.0	16.4	6.95	8.3	1.6	8.0	16.0	Q1

TAPE AND REEL BOX DIMENSIONS

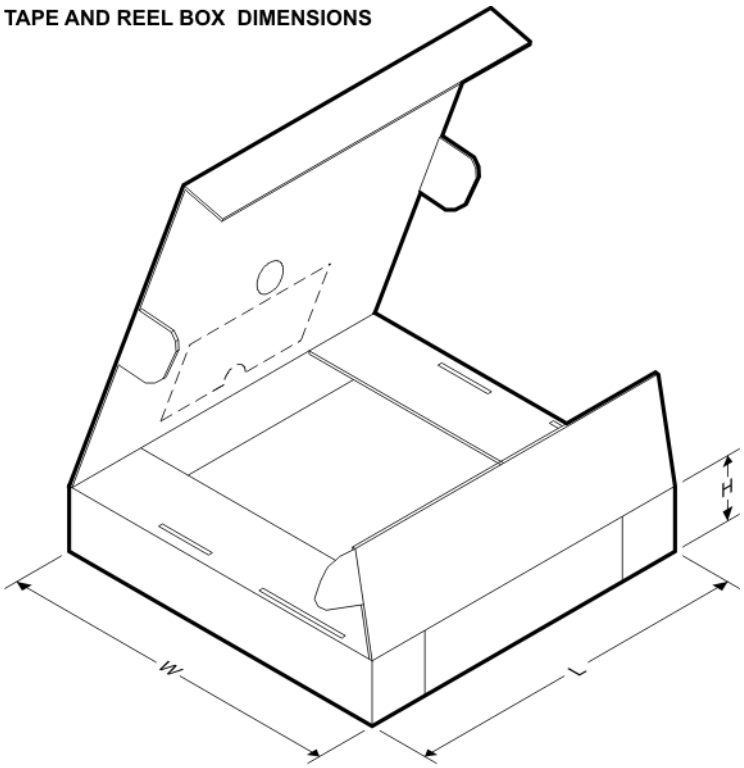

*All dimensions are nominal

Device	Package Type	Package Drawing	Pins	SPQ	Length (mm)	Width (mm)	Height (mm)
PCM1865QDBTRQ1	TSSOP	DBT	30	2000	367.0	367.0	38.0

DBT (R–PDSO–G30) PLASTIC SMALL OUTLINE

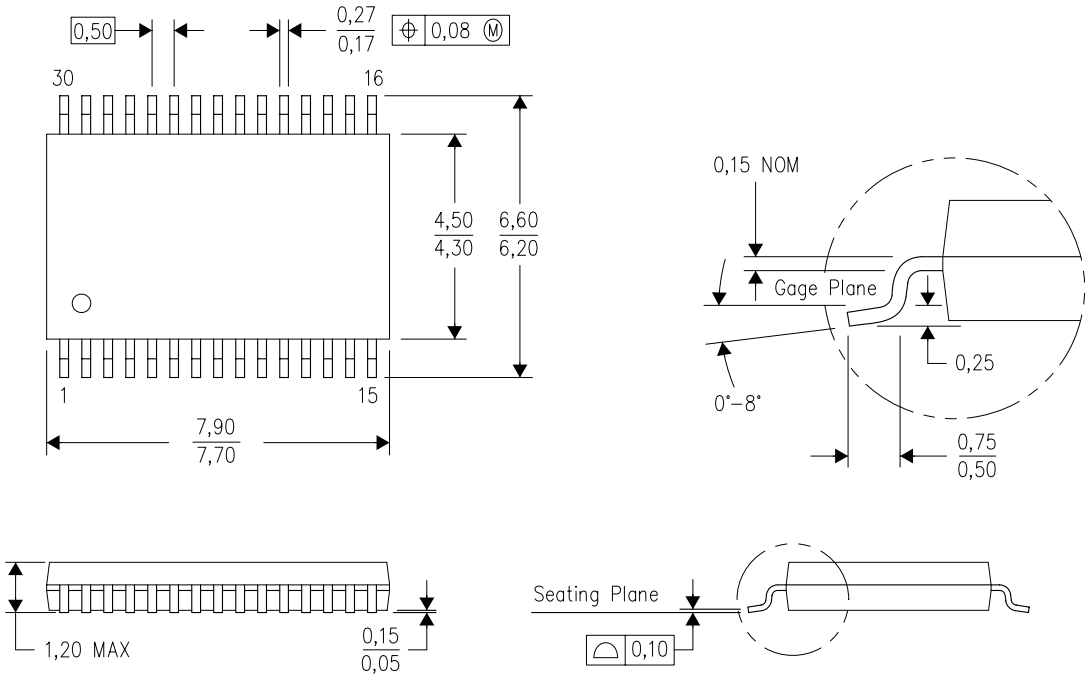

4073252–5/I 03/11

NOTES:
A. All linear dimensions are in millimeters. Dimensioning and tolerancing per ASME Y14.5M–1994.
B. This drawing is subject to change without notice.
C. Body dimensions do not include mold flash or protrusion.
D. Falls within JEDEC MO–153.

IMPORTANT NOTICE

Texas Instruments Incorporated and its subsidiaries (TI) reserve the right to make corrections, enhancements, improvements and other changes to its semiconductor products and services per JESD46, latest issue, and to discontinue any product or service per JESD48, latest issue. Buyers should obtain the latest relevant information before placing orders and should verify that such information is current and complete. All semiconductor products (also referred to herein as “components”) are sold subject to TI’s terms and conditions of sale supplied at the time of order acknowledgment.

TI warrants performance of its components to the specifications applicable at the time of sale, in accordance with the warranty in TI’s terms and conditions of sale of semiconductor products. Testing and other quality control techniques are used to the extent TI deems necessary to support this warranty. Except where mandated by applicable law, testing of all parameters of each component is not necessarily performed.

TI assumes no liability for applications assistance or the design of Buyers’ products. Buyers are responsible for their products and applications using TI components. To minimize the risks associated with Buyers’ products and applications, Buyers should provide adequate design and operating safeguards.

TI does not warrant or represent that any license, either express or implied, is granted under any patent right, copyright, mask work right, or other intellectual property right relating to any combination, machine, or process in which TI components or services are used. Information published by TI regarding third-party products or services does not constitute a license to use such products or services or a warranty or endorsement thereof. Use of such information may require a license from a third party under the patents or other intellectual property of the third party, or a license from TI under the patents or other intellectual property of TI.

Reproduction of significant portions of TI information in TI data books or data sheets is permissible only if reproduction is without alteration and is accompanied by all associated warranties, conditions, limitations, and notices. TI is not responsible or liable for such altered documentation. Information of third parties may be subject to additional restrictions.

Resale of TI components or services with statements different from or beyond the parameters stated by TI for that component or service voids all express and any implied warranties for the associated TI component or service and is an unfair and deceptive business practice. TI is not responsible or liable for any such statements.

Buyer acknowledges and agrees that it is solely responsible for compliance with all legal, regulatory and safety-related requirements concerning its products, and any use of TI components in its applications, notwithstanding any applications-related information or support that may be provided by TI. Buyer represents and agrees that it has all the necessary expertise to create and implement safeguards which anticipate dangerous consequences of failures, monitor failures and their consequences, lessen the likelihood of failures that might cause harm and take appropriate remedial actions. Buyer will fully indemnify TI and its representatives against any damages arising out of the use of any TI components in safety-critical applications.

In some cases, TI components may be promoted specifically to facilitate safety-related applications. With such components, TI’s goal is to help enable customers to design and create their own end-product solutions that meet applicable functional safety standards and requirements. Nonetheless, such components are subject to these terms.

No TI components are authorized for use in FDA Class III (or similar life-critical medical equipment) unless authorized officers of the parties have executed a special agreement specifically governing such use.

Only those TI components which TI has specifically designated as military grade or “enhanced plastic” are designed and intended for use in military/aerospace applications or environments. Buyer acknowledges and agrees that any military or aerospace use of TI components which have ***not*** been so designated is solely at the Buyer's risk, and that Buyer is solely responsible for compliance with all legal and regulatory requirements in connection with such use.

TI has specifically designated certain components as meeting ISO/TS16949 requirements, mainly for automotive use. In any case of use of non-designated products, TI will not be responsible for any failure to meet ISO/TS16949.

Products		**Applications**	
Audio	www.ti.com/audio	Automotive and Transportation	www.ti.com/automotive
Amplifiers	amplifier.ti.com	Communications and Telecom	www.ti.com/communications
Data Converters	dataconverter.ti.com	Computers and Peripherals	www.ti.com/computers
DLP® Products	www.dlp.com	Consumer Electronics	www.ti.com/consumer-apps
DSP	dsp.ti.com	Energy and Lighting	www.ti.com/energy
Clocks and Timers	www.ti.com/clocks	Industrial	www.ti.com/industrial
Interface	interface.ti.com	Medical	www.ti.com/medical
Logic	logic.ti.com	Security	www.ti.com/security
Power Mgmt	power.ti.com	Space, Avionics and Defense	www.ti.com/space-avionics-defense
Microcontrollers	microcontroller.ti.com	Video and Imaging	www.ti.com/video
RFID	www.ti-rfid.com		
OMAP Applications Processors	www.ti.com/omap	**TI E2E Community**	e2e.ti.com
Wireless Connectivity	www.ti.com/wirelessconnectivity		

Mailing Address: Texas Instruments, Post Office Box 655303, Dallas, Texas 75265
Copyright © 2015, Texas Instruments Incorporated