NOTES:
1. HARDWARE IS INCLUDED.

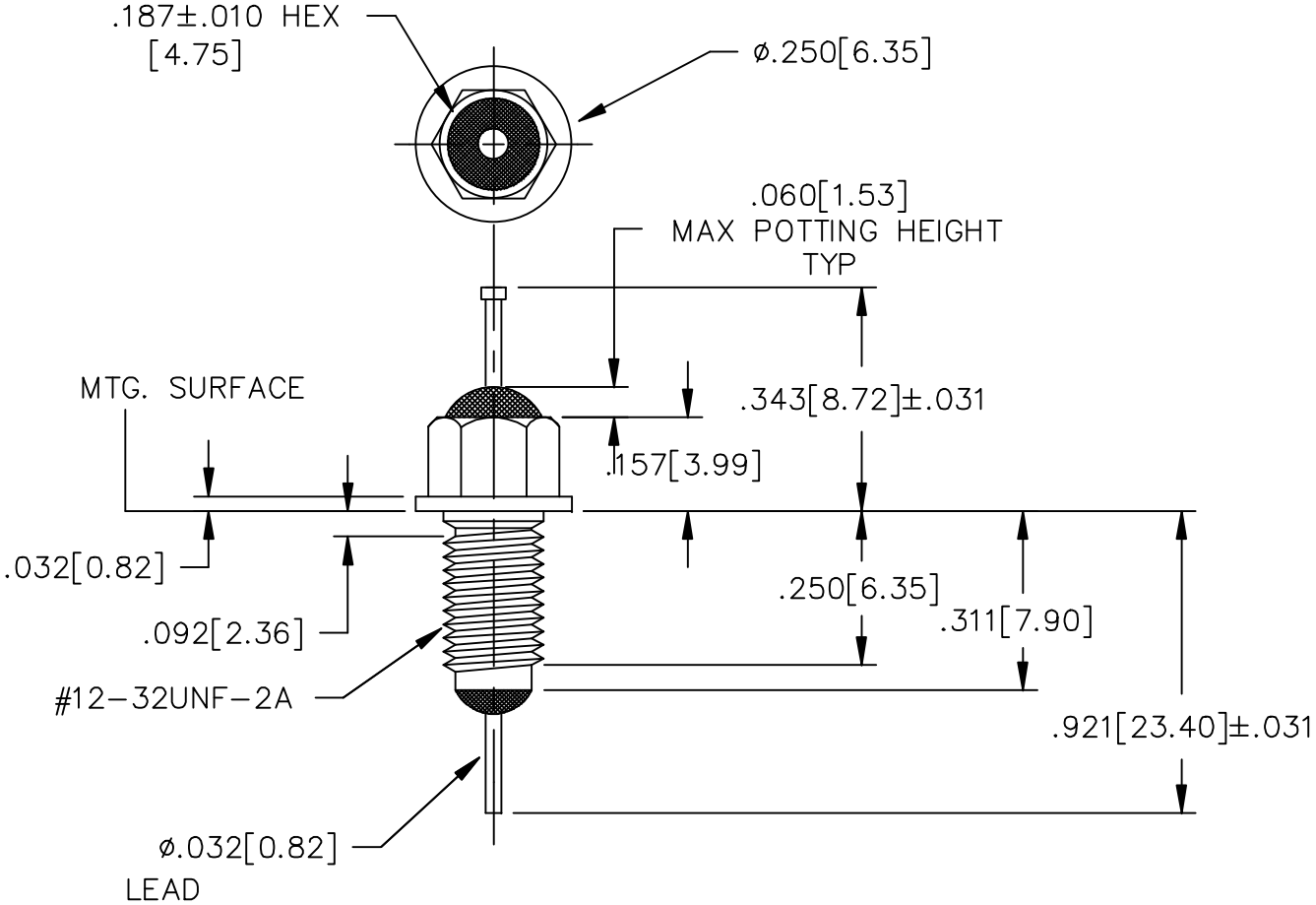

LEAD FINISH: SOLDER	
BUSHING FINISH: SILVER	
CAPACITANCE	.005uF MIN
TEMP. RANGE	-55°C TO 125°C
CURRENT	10 AMP MAX.
WORKING VOLTAGE	85°C -- VDC MAX. 125°C 200 VDC MAX.
D.C. RESISTANCE	.01ohms MAX.

SCHEMATIC

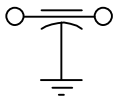

MARKING:

PART: SCI-9320-502
BAG:
SCI-9320-502
DATE CODE
LOT NO.
QTY./BAG (200 MAX.)

	02		00	REV. NO.	TOLERANCES UNLESS OTHERWISE SPECIFIED
	CN. 213165	WRONG REV.	CN. 207856	CHANGE NOTICE	Fractions ± 1/64 Dec. .xx± Dec. .xxx±.005 Angles ±0° 30′ CODE IDENT. NO. OLSP2

SPECTRUM CONTROL INC.

ERIE, FAIRVIEW
PENNSYLVANIA

Dwn. KRDZALIC	Description FT
Ckd. 7/11/02	RESIN SEAL FILTER
Apvd.	SCI-9320-502
Scale NONE	