MICRO SWITCH
FREEPORT ILLINOIS U S A
A DIVISION OF HONEYWELL
FED. MFG CODE 91929

SWITCH-ENCLOSED

CATALOG LISTING
1EN342-R

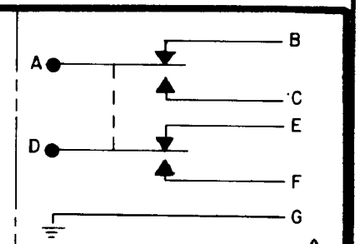

CIRCUIT DIAGRAM 7

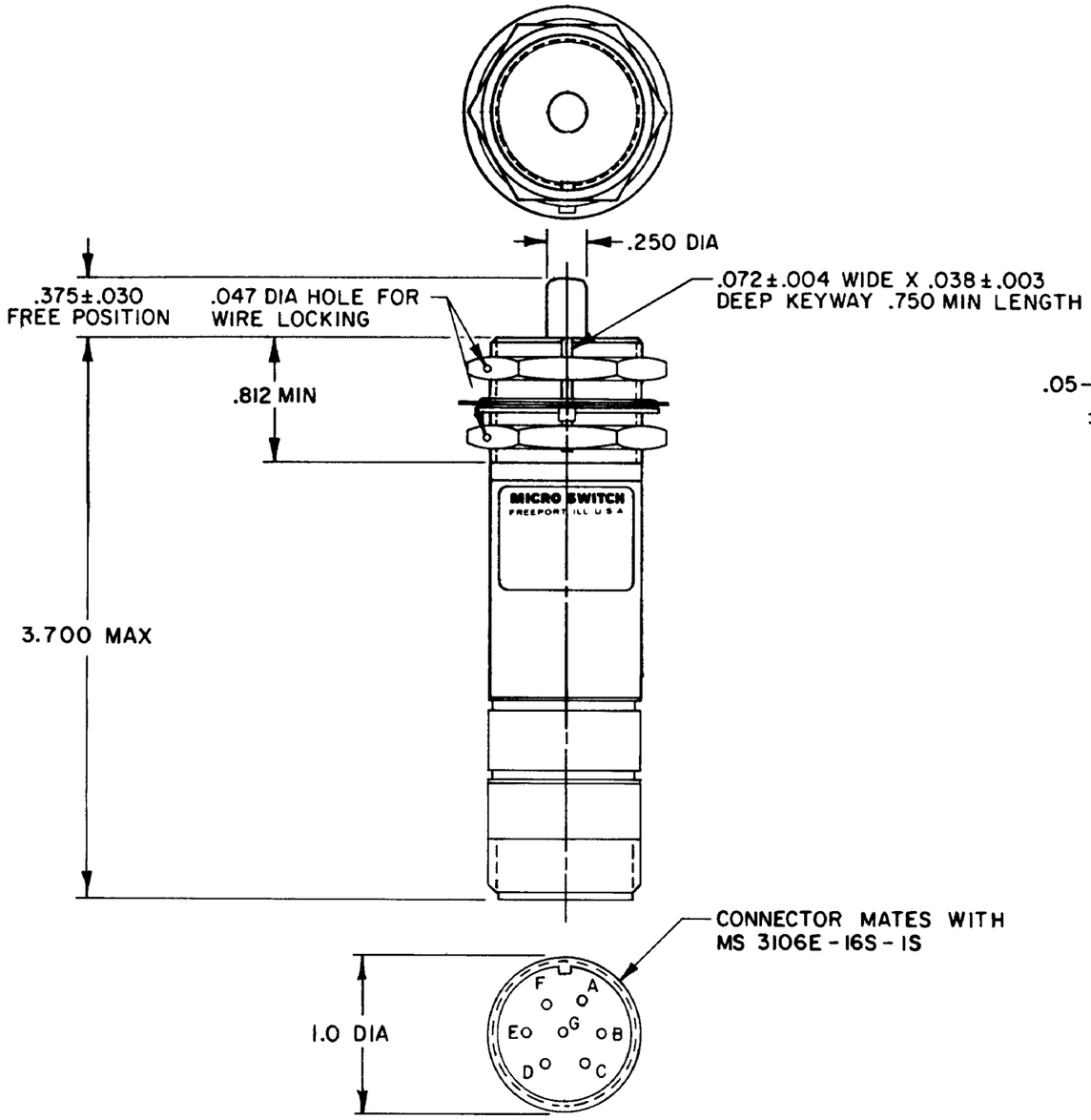

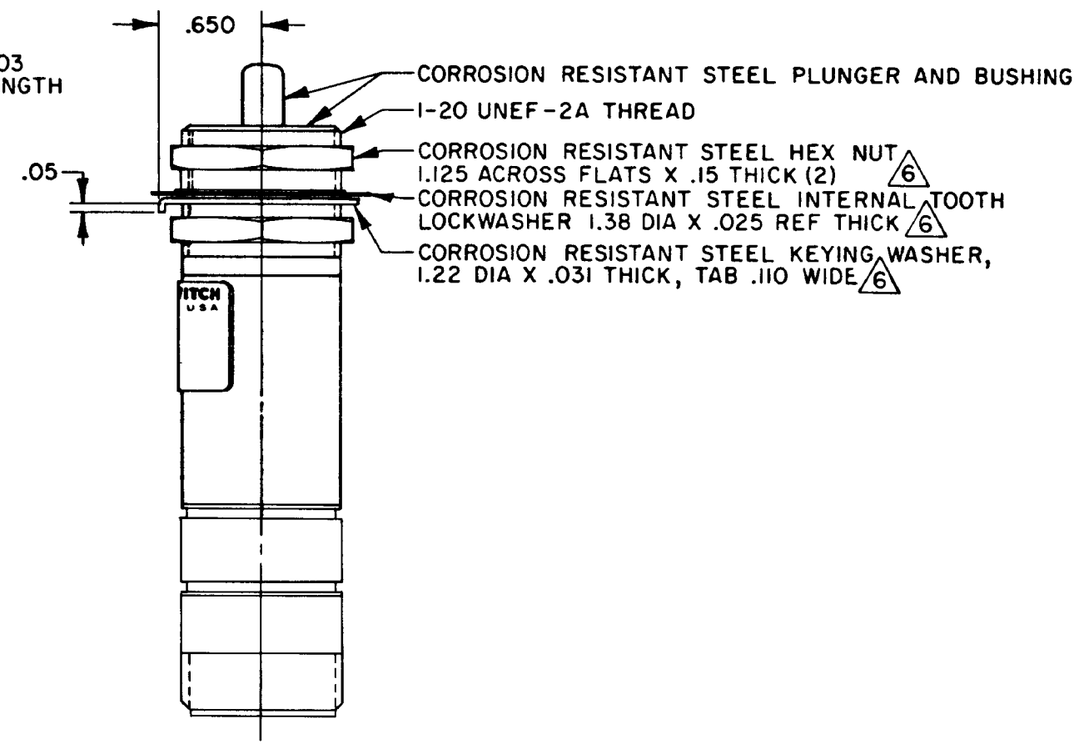

NOTES
1 - COLD ROLLED STEEL ENCLOSURE FINISHED WITH GREEN EPOXY BASED ENAMEL COLOR NO. 34151 PER FEDERAL STANDARD
2 - SWITCH SEALED PER MIL-S-8805 SYMBOL 4
3 - CIRCUIT DIAGRAM AND CATALOG LISTING ARE SHOWN ON NAMEPLATE
4 - ALL EXTERNAL PARTS ARE MADE OF OR TREATED WITH CORROSION RESISTANT MATERIAL
5 - COINCIDENCE OF OPERATING AND RELEASING POINTS: .010 OF PLUNGER TRAVEL
6 HARDWARE MAY BE PACKAGED UNASSEMBLED PER MIL-S-8805
7 RESISTANCE BETWEEN PIN "G" AND THREADED BUSHING MEASURED PER MIL-STD-202, METHOD 303, NOT TO EXCEED 1.0 OHMS

THIS DRAWING COVERS A PROPRIETARY ITEM AND IS THE PROPERTY OF MICRO SWITCH, A DIVISION OF HONEYWELL. THIS DRAWING IS NOT TO BE COPIED OR USED WITHOUT THE APPROVAL OF MICRO SWITCH.

THIRD ANGLE PROJECTION

SCALE FULL
DO NOT SCALE PRINT

TOLERANCES
APPLY TO DESIGN UNITS CONVERSIONS ARE ONLY FOR REFERENCE UNLESS NOTED TOLERANCES ARE ±

	DIM. mm	TOL. mm/in	DIM in	TOL. mm/in
NO PLACES	X	1/0.4		
ONE PLACE	X.X	0.4/0.016	X.X	0.8/.03
TWO PLACES	X.XX	0.16/.006	X.XX	0.38/.015
THREE PLACES			X.XXX	0.13/.005
ANGLES				

DESIGN UNITS SI METRIC ☐ US CUSTOMARY ☒

RAW MATERIAL-COMMERCIAL STANDARD
MICRO SWITCH STANDARDS APPLY
DIMENSIONS ARE TO BE MET BEFORE PROTECTIVE COATINGS ARE APPLIED

WEIGHT 7.0 OZ MAX

CHARACTERISTICS

OPERATING FORCE	6-12 LB
FULL OVERTRAVEL FORCE	30 LB MAX
RELEASE FORCE	4 LB MIN
PRETRAVEL	.040 MAX
DIFFERENTIAL TRAVEL	.020 MAX
OVERTRAVEL	.250 MIN

ELECTRICAL DATA

CONTACT ARRANGEMENT
SPDT (2)

LOAD	28 VDC
	SEA LEVEL
RES	5
IND	3
MOTOR	4

FORMTEK

1EN342-R
PAGE 1 OF 1
DRAWING NUMBER M
RELEASE NO. PR-5967
REPLACES
ISSUE 6
CHECK

REVISIONS
A C04435J PART 7 WJM 4 APR 79
B C047573 J A P 5 AUG 80
C C068547 SAV 15 OCT 90
D C073874 TSM 5 DEC 92
E CO-92255 J J A 10 FEB 98

CHECK 24 APR 79
CHECK C E B
CHECK 4 APR 79
DRAWN WJM

FO-52851-A