Jul.1.2019 Copyright 2019 HIROSE ELECTRIC CO., LTD. All Rights Reserved.
In case of consideration for using Automotive equipment / device which demand high reliability, kindly contact our sales window correspondents.

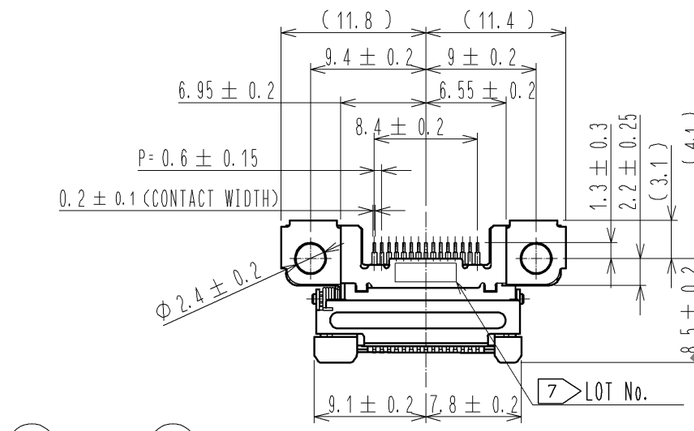

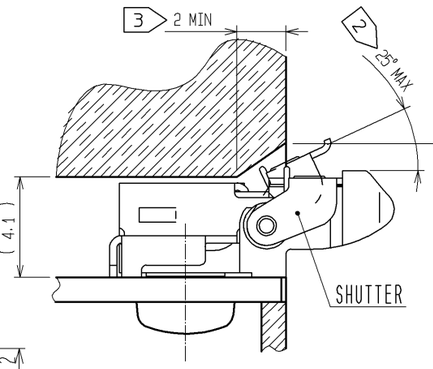

PANEL CUTOUT(4:1)

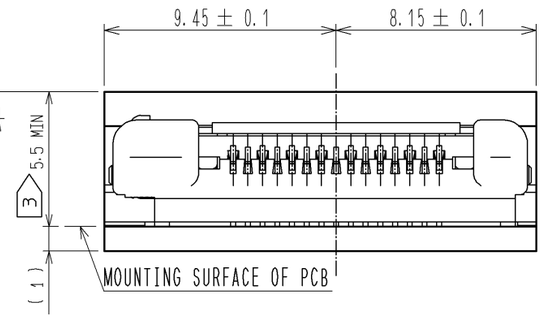

RECOMMENDED PCB PATTERN
(CONNECTOR MOUNTING SIDE)

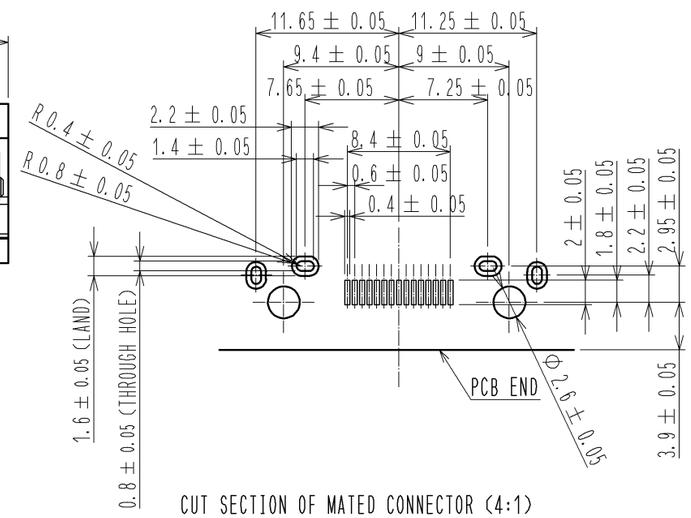

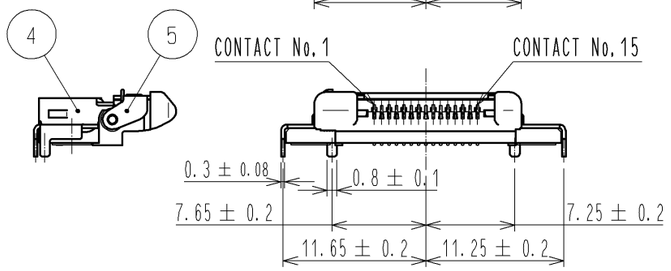

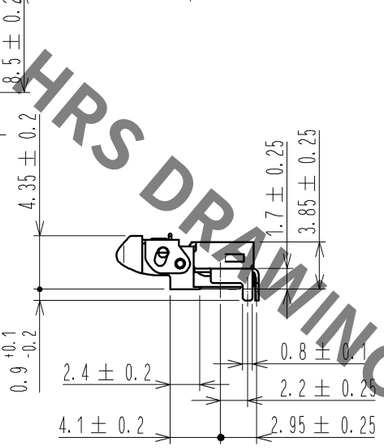

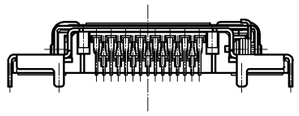

CUT SECTION OF MATED CONNECTOR (4:1)

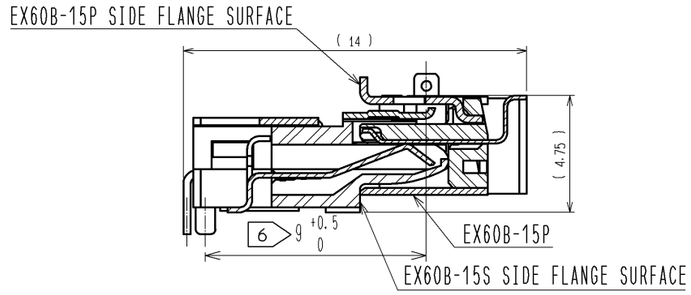

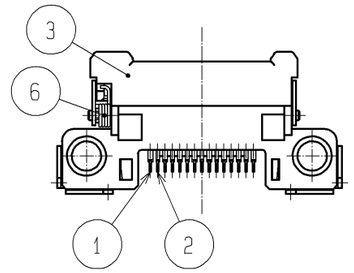

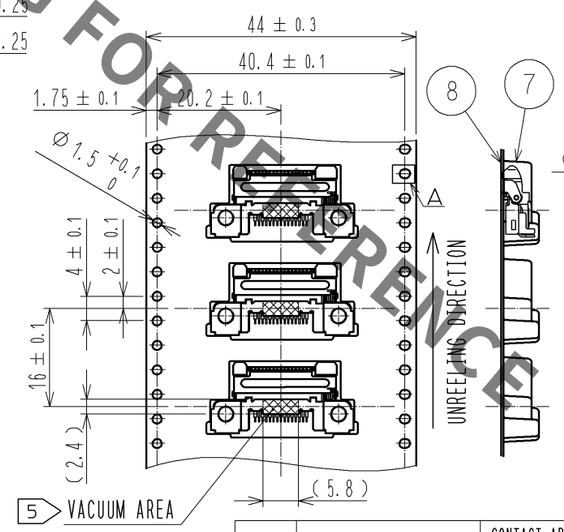

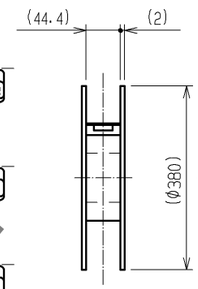

4 DRAWING FOR PACKING(FREE)

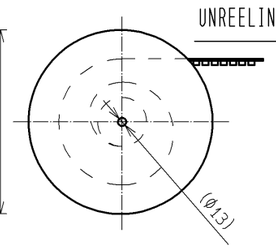

A (FREE)

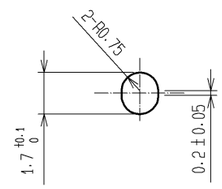

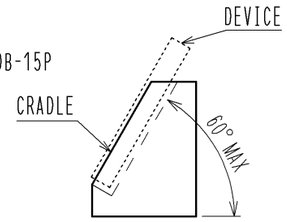

NOTES 1. THIS PRODUCT IS CRADLE CONNECTOR. CORRESPONDING CONNECTOR : EX60B-15P
THE CRADLE WEIGHT SHOULD BE 150g OR MORE.
THE CRADLE ANGLE SHOULD BE 60 DEGREE OR LESS.

2 MAXIMUM ANGLE OF SHUTTER MOVEMENT IS 25 DEGREE, AND THE COMPONENT COULD BE BROKEN BY OVERLOAD.
3 CLEARANCE AS SHOWN IN THE DRAWING IS REQUIRED ON YOUR DEVICE CHASSIS NOT TO HINDER THE SHUTTER MOVEMENT.
4 1REEL : 800 PIECES
5 VACUUM CROSS HATCHED SURFACE FOR AUTOMATIC PICK AND PLACE MOUNTING.
6 CORRELATION DIMENSION IN MATING CONDITION WITH CORRESPONDING CONNECTOR SHOULD BE 9 TO 9.5mm INCLUDING TOLERANCE.
7 LOT No. FOLLOWS BELOW DEFINITION.
EXAMPLE) 7G21 ①YEAR (THE LAST DIGIT OF CHRISTIAN YEAR : YEAR 2007)
②MONTH (A:JAN, B:FEB・・・L:DEC)
③DAY (1, 2・・・A:10, ・・・X:31)
I AND O ARE EXCLUDED.
④LINE No. : LINE No.1
8. CONTACT CO-PLANARITY IS 0.1 MAX.

NO.	MATERIAL	FINISH , REMARKS
2	COPPER ALLOY	CONTACT AREA : GOLD 0.2μm min. LEAD AREA : GOLD 0.03μm min. UNDER PLATING : NICKEL 1μm min.
1	COPPER ALLOY	CONTACT AREA : GOLD 0.2μm min. LEAD AREA : GOLD 0.03μm min. UNDER PLATING : NICKEL 1μm min.

NO.	MATERIAL	FINISH , REMARKS
8	PS	TOP COVER TAPE
7	PS	EMBOSSED CARRIER TAPE
6	STAINLESS STEEL	
5	STAINLESS STEEL	
4	STAINLESS STEEL	SURFACE : TIN REFLOW PLATING 1μm min. UNDER PLATING : NICKEL 0.2μm min.
3	POLYAMIDE	(BLACK) UL94V-0

UNITS	SCALE	COUNT	DESCRIPTION OF REVISIONS	DESIGNED	CHECKED	DATE
mm	2 : 1					

HIROSE ELECTRIC CO., LTD.

APPROVED	: YH. ENAMI	08. 07. 04	DRAWING NO.	EDC3-126446-01
CHECED	: HK. TANAKA	08. 07. 04	PART NO.	EX60B-15S
DESIGNED	: MT. ITANO	08. 07. 03	CODE NO.	CL232-0622-1-00
DRAWN	: MT. ITANO	08. 07. 03		1/1

HRS DRAWING FOR REFERENCE