THIS DRAWING IS UNPUBLISHED. RELEASED FOR PUBLICATION AUG ,2006.
© COPYRIGHT – BY TYCO ELECTRONICS CORPORATION. ALL RIGHTS RESERVED.

| LOC | DIST |
|---|---|
| DW | – |

REVISIONS

| P | LTR | DESCRIPTION | DATE | DWN | APVD |
|---|---|---|---|---|---|
| | E2 | REVISED. ECR-15-016136 | 06NOV2015 | J.W | S.H |

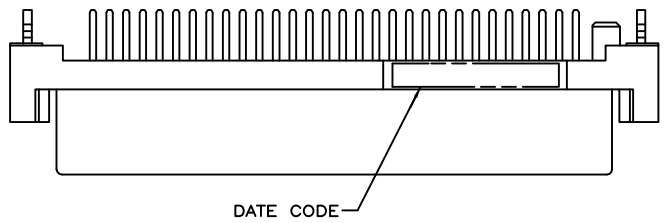


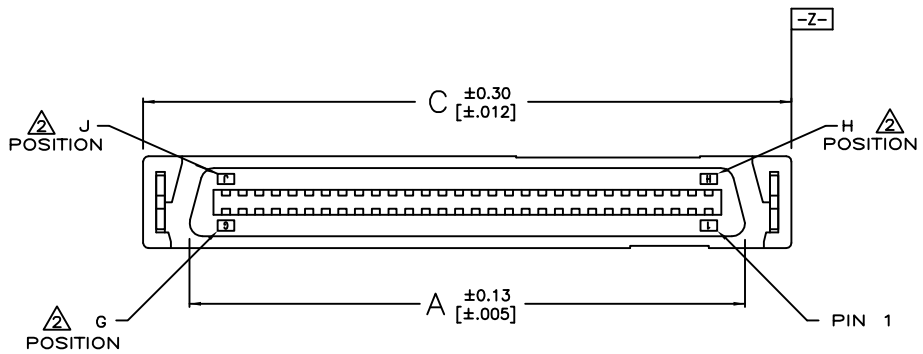


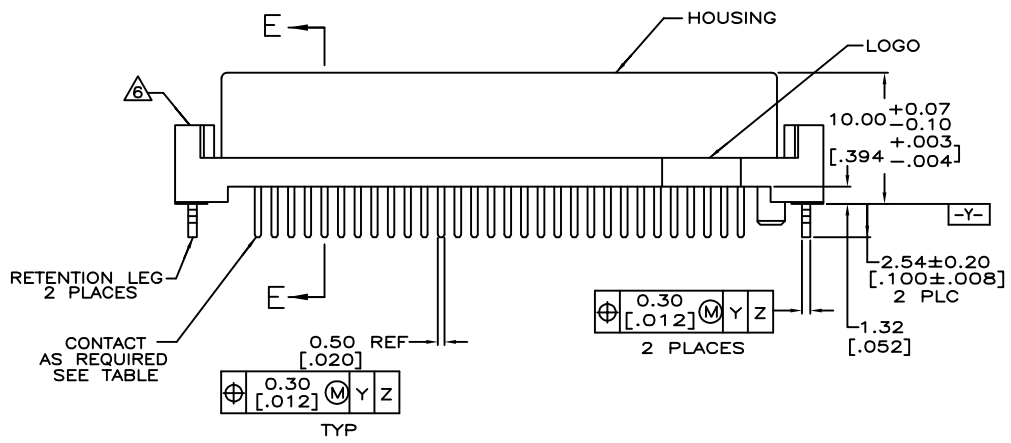


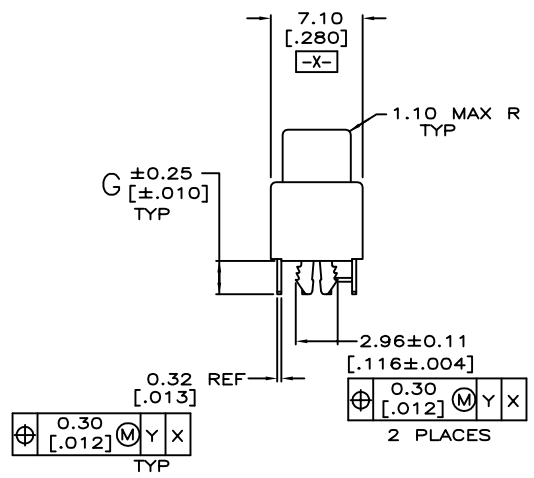


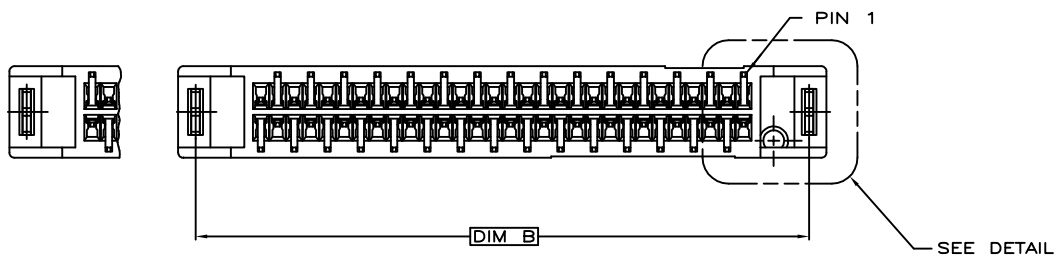


1. MATERIALS:
   HOUSING– PPA RESIN, BLACK, MOLDING COMPOUND.
   CONTACTS– PHOSPHOR BRONZE PLATED WITH MINIMUM THICK (SEE TABLE) GOLD IN CONTACT AREA AND 3.8μm [.000150] MINIMUM THICK MATTE TIN ON SOLDER TINES OVER 1.27μm [.000050] MINIMUM THICK NICKEL UNDERPLATE.
   RETENTION LEG– BRASS PLATED WITH 3.8μm [.000150] MINIMUM TIN–Cu OVER 1.3μm [.000051] MINIMUM NICKEL UNDERPLATE.
2. G, J, AND H INDICATE NUMBER OF POSITION MARKED ON ASSEMBLY. ALSO SEE TABLE.
3. ALL DIMENSIONS SHOWN ARE MAXIMUM UNLESS OTHERWISE SPECIFIED.
4. 60 POSITION AS SHOWN.
5. RETENTION LEGS NOT PRESENT.
6. TOP OF RETENTION LEG MAY NOT PROTRUDE ABOVE THIS SURFACE.
7. HOUSING BOW UP TO 0.30 [.012] ALLOWED.
8. CONNECTOR WILL ACCOMMODATE MATING PRINTED CIRCUIT BOARD OF 1.6±0.07 [.063±.003] THICKNESS.
9. AIWAYS RoHS/ELV COMPLIANT.
10. WAVE SOLDER CAPABLE TO 265 C PER TE SPEC 109–202, CONDITION B.
11. REMOVE CONTACT POSITION FROM #11~#17 AND #36~#42.
12. RECOMMEND CARD EDGE DIM. (PAGE2)
13. GOLD FLASH OVER 0.762μm [30μ"] MIN. PALLADIUM–NICKEL PLATED.
14. OBSOLETE
15. REMOVE CONTACT POSITION FROM #23~#29 AND #57~#63.

| PCB THICKNESS | G | F 12 | C | B | A | G 2 | J 2 | H 2 | GOLD PLATED | PART NUMBER | Note | POS. |
|---|---|---|---|---|---|---|---|---|---|---|---|---|
| 2.36 [.093] | 3.30 [.130] | 127.43 [5.017] | 138.35 [5.447] | 135.71 [5.343] | 131.27 [5.168] | 100 | 200 | 101 | ~~GOLD FLASH~~ | ~~5-1734101-6~~ | 7 | 200 |
| | | | | | | | | | ~~0.381um[15u"]~~ | ~~3-1734101-6~~ | | |
| | | | | | | | | | 13 | ~~1-1734101-6~~ | | |
| 0.8–1.6 [.031–.063] | 2.54 [.100] | 127.43 [5.017] | 138.35 [5.447] | 135.71 [5.343] | 131.27 [5.168] | 100 | 200 | 101 | ~~GOLD FLASH~~ | ~~5-1734101-5~~ | | |
| | | | | | | | | | ~~0.381um[15u"]~~ | ~~3-1734101-5~~ | | |
| | | | | | | | | | 13 | ~~1-1734101-5~~ | | |
| 0.8–1.6 [.031–.063] | 2.54 [.100] | 102.03 [4.017] | 112.95 [4.447] | 110.31 [4.343] | 105.87 [4.168] | 80 | 160 | 81 | GOLD FLASH | 5-1734101-4 | 7 | 160 |
| | | | | | | | | | 0.381um[15u"] | 3-1734101-4 | | |
| | | | | | | | | | 13 | 1-1734101-4 | | |
| 2.36 [.093] | 3.30 [.130] | 76.63 [3.017] | 87.55 [3.447] | 84.91 [3.343] | 80.47 [3.168] | 60 | 120 | 61 | ~~GOLD FLASH~~ | ~~5-1734101-3~~ | | 120 |
| | | | | | | | | | ~~0.381um[15u"]~~ | ~~3-1734101-3~~ | | |
| | | | | | | | | | 13 | 1-1734101-3 | | |
| 0.8–1.6 [.031–.063] | 2.54 [.100] | 76.63 [3.017] | 87.55 [3.447] | 84.91 [3.343] | 80.47 [3.168] | 60 | 120 | 61 | GOLD FLASH | 5-1734101-2 | | |
| | | | | | | | | | 0.381um[15u"] | 3-1734101-2 | | |
| | | | | | | | | | 13 | 1-1734101-2 | | |
| 2.36 [.093] | 3.30 [.130] | 63.93 [2.517] | 74.85 [2.947] | 72.21 [2.843] | 67.77 [2.668] | 50 | 100 | 51 | ~~GOLD FLASH~~ | ~~5-1734101-1~~ | | 100 |
| | | | | | | | | | ~~0.381um[15u"]~~ | ~~3-1734101-1~~ | | |
| | | | | | | | | | 13 | 1-1734101-1 | | |
| 0.8–1.6 [.031–.063] | 2.54 [.100] | 63.93 [2.517] | 74.85 [2.947] | 72.21 [2.843] | 67.77 [2.668] | 50 | 100 | 51 | GOLD FLASH | 5-1734101-0 | | |
| | | | | | | | | | 0.381um[15u"] | 3-1734101-0 | | |
| | | | | | | | | | 13 | 1-1734101-0 | | |
| 0.8–1.6 [.031–.063] | 2.54 [.100] | 51.23 [2.017] | 62.15 [2.447] | 59.51 [2.343] | 55.07 [2.168] | 40 | 80 | 41 | ~~GOLD FLASH~~ | ~~5-1734101-8~~ | 5 | 80 |
| | | | | | | | | | ~~0.381um[15u"]~~ | ~~3-1734101-8~~ | | |
| | | | | | | | | | 13 | 1-1734101-8 | | |
| 2.36 [.093] | 3.30 [.130] | 51.23 [2.017] | 62.15 [2.447] | 59.51 [2.343] | 55.07 [2.168] | 40 | 80 | 41 | ~~GOLD FLASH~~ | ~~4-1734101-9~~ | | 80 |
| | | | | | | | | | ~~0.381um[15u"]~~ | ~~6-1734101-9~~ | | |
| | | | | | | | | | 13 | 1734101-9 | | |
| 0.8–1.6 [.031–.063] | 2.54 [.100] | 51.23 [2.017] | 62.15 [2.447] | 59.51 [2.343] | 55.07 [2.168] | 40 | 80 | 41 | GOLD FLASH | 4-1734101-8 | | |
| | | | | | | | | | 0.381um[15u"] | 6-1734101-8 | | |
| | | | | | | | | | 13 | 1734101-8 | | |
| E2 0.8–1.6 [.031–.063] | 2.54 [.100] | 43.61 [1.717] | 54.53 [2.147] | 51.89 [2.043] | 47.45 [1.868] | 34 | 68 | 35 | 13 | 7-1734101-7 | 15 | 68 |
| | | | | | | | | | GOLD FLASH | 4-1734101-7 | | |
| | | | | | | | | | 0.381um[15u"] | 6-1734101-7 | | |
| | | | | | | | | | 13 | 1734101-7 | | |
| 2.36 [.093] | 3.40 [.134] | 38.53 [1.517] | 49.45 [1.947] | 46.81 [1.843] | 42.37 [1.668] | 30 | 60 | 31 | GOLD FLASH | 4-1734101-6 | | 60 |
| | | | | | | | | | 0.381um[15u"] | 6-1734101-6 | | |
| | | | | | | | | | 13 | 1734101-6 | | |
| | | | | | | | | | 13 | 2-1734101-7 | 11 | 50 |
| 2.36 [.093] | 3.30 [.100] | 32.18 [1.267] | 43.10 [1.697] | 40.46 [1.593] | 36.02 [1.418] | 25 | 50 | 26 | ~~GOLD FLASH~~ | ~~5-1734101-7~~ | | |
| | | | | | | | | | ~~0.381um[15u"]~~ | ~~3-1734101-7~~ | | |
| | | | | | | | | | 13 | 1-1734101-7 | | |
| 0.8–1.6 [.031–.063] | 2.54 [.100] | 32.18 [1.267] | 43.10 [1.697] | 40.46 [1.593] | 36.02 [1.418] | 25 | 50 | 26 | GOLD FLASH | 4-1734101-5 | | |
| | | | | | | | | | 0.381um[15u"] | 6-1734101-5 | | |
| | | | | | | | | | 13 | 1734101-5 | | |
| 0.8–1.6 [.031–.063] | 2.54 [.100] | 25.83 [1.017] | 36.75 [1.447] | 34.11 [1.343] | 29.67 [1.168] | 20 | 40 | 21 | GOLD FLASH | 4-1734101-4 | | 40 |
| | | | | | | | | | 0.381um[15u"] | 6-1734101-4 | | |
| | | | | | | | | | 13 | 1734101-4 | | |
| 0.8–1.6 [.031–.063] | 2.54 [.100] | – – | 30.40 [1.197] | 27.96 [1.101] | 23.32 [.918] | 15 | 30 | 16 | GOLD FLASH | 4-1734101-3 | | 30 |
| | | | | | | | | | 0.381um[15u"] | 6-1734101-3 | | |
| | | | | | | | | | 13 | 1734101-3 | | |

THIS DRAWING IS A CONTROLLED DOCUMENT.

DIMENSIONS: MM

TOLERANCES UNLESS OTHERWISE SPECIFIED:
0 PLC ± –
1 PLC ± –
2 PLC ± – 3
3 PLC ± –
4 PLC ± –
ANGLES ± –

MATERIAL: SEE NOTE
FINISH: SEE NOTE

DWN F. YANG 31MAR2009
CHK S. CHIEN 31MAR2009
APVD W. KODAMA 31MAR2009
PRODUCT SPEC 108-57876
QUALIFICATION TEST REPORT –
WEIGHT –

TE Connectivity

NAME: RECEPTACLE ASSEMBLY, VERTICAL, BOARD–TO–BOARD, CHAMP.050, SERIES I,

SIZE A3 | CAGE CODE 00779 | DRAWING NO C-1734101 | RESTRICTED TO –

CUSTOMER DRAWING | SCALE – | SHEET 1 OF 4 | REV E2

THIS DRAWING IS UNPUBLISHED. RELEASED FOR PUBLICATION AUG ,2006.
© COPYRIGHT – BY TYCO ELECTRONICS CORPORATION. ALL RIGHTS RESERVED.

| LOC | DIST |
|---|---|
| DW | – |

REVISIONS

| P | LTR | DESCRIPTION | DATE | DWN | APVD |
|---|---|---|---|---|---|
| | | SEE SHEET 1. | | | |

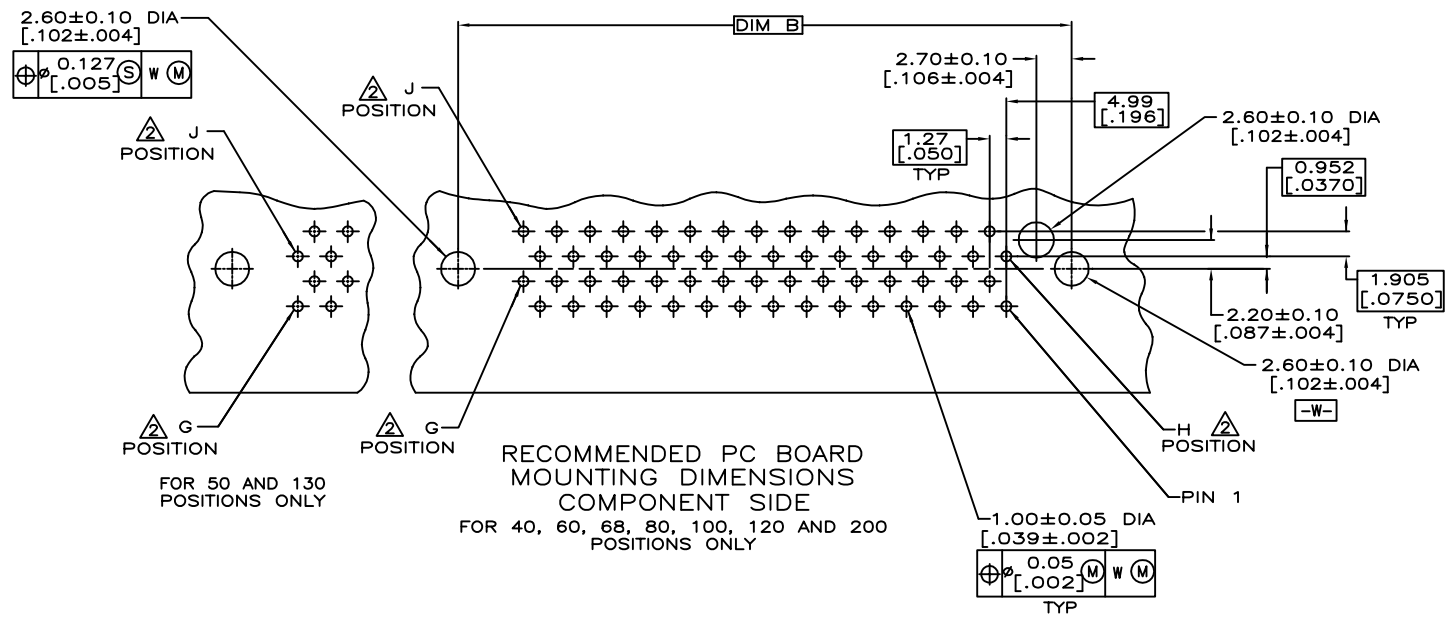


FOR 50 AND 130 POSITIONS ONLY

RECOMMENDED PC BOARD MOUNTING DIMENSIONS COMPONENT SIDE

FOR 40, 60, 68, 80, 100, 120 AND 200 POSITIONS ONLY

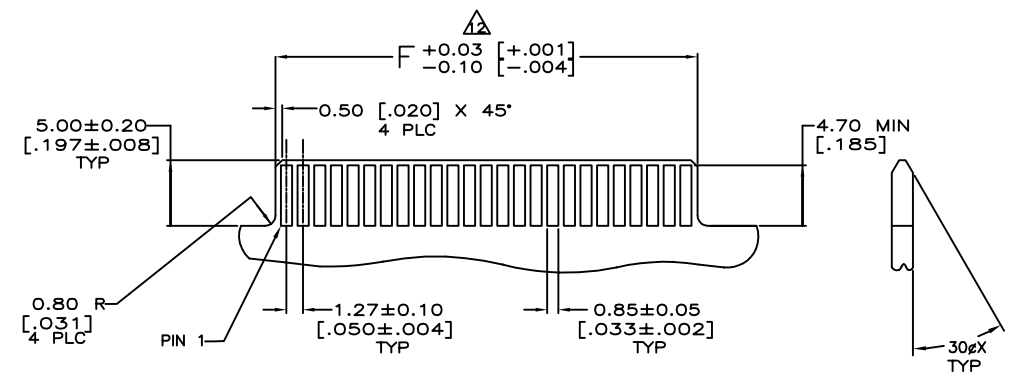


RECOMMENDED CARD EDGE LAYOUT

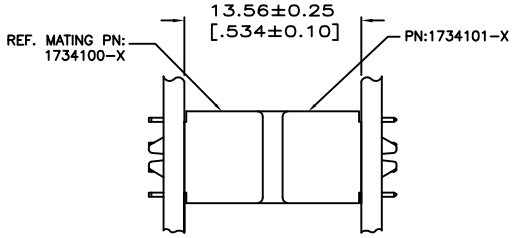


VERTICAL RECEPTACLE ASSEMBLY MATED TO VERTICAL PLUG ASSEMBLY

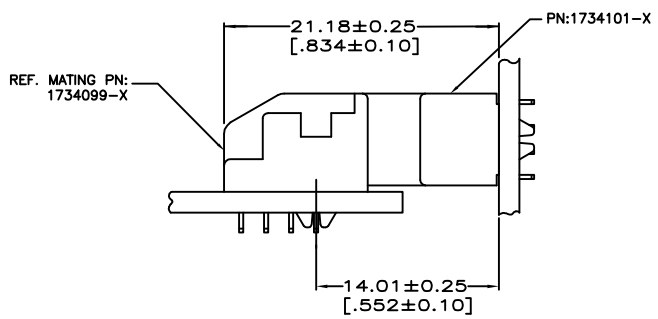


VERTICAL RECEPTACLE ASSEMBLY MATED TO VERTICAL PLUG ASSEMBLY

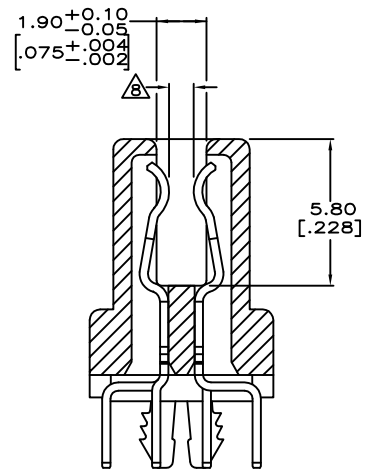


SECTION E–E
SCALE 8:1

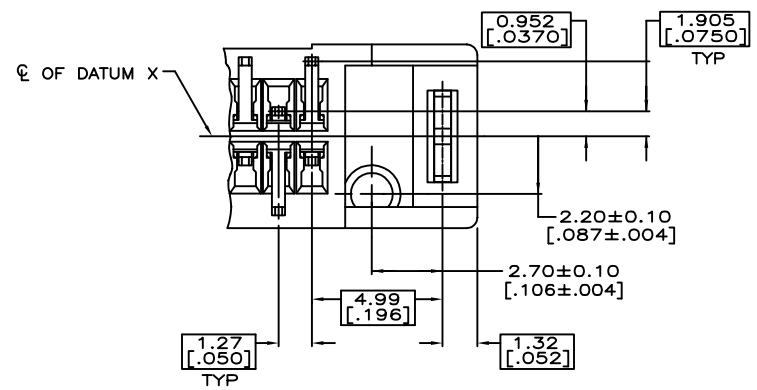


DETAIL D
SCALE 8:1

THIS DRAWING IS A CONTROLLED DOCUMENT.

DIMENSIONS: MM

TOLERANCES UNLESS OTHERWISE SPECIFIED:

| | |
|---|---|
| 0 PLC | ± – |
| 1 PLC | ± – |
| 2 PLC | ± – |
| 3 PLC | ± – |
| 4 PLC | ± – |
| ANGLES | ± – |

MATERIAL –

FINISH –

DWN
CHK
APVD
PRODUCT SPEC —
QUALIFICATION TEST REPORT —
WEIGHT —

TE Connectivity

NAME
RECEPTACLE ASSEMBLY, VERTICAL, BOARD–TO–BOARD, CHAMP.050, SERIES I,

| SIZE | CAGE CODE | DRAWING NO | RESTRICTED TO |
|---|---|---|---|
| A3 | 00779 | C-1734101 | – |

CUSTOMER DRAWING | SCALE – | SHEET 2 OF 4 | REV E2

THIS DRAWING IS UNPUBLISHED. RELEASED FOR PUBLICATION AUG ,2006.
© COPYRIGHT – BY TYCO ELECTRONICS CORPORATION. ALL RIGHTS RESERVED.

| LOC | DIST |
|---|---|
| DW | – |

REVISIONS

| P | LTR | DESCRIPTION | DATE | DWN | APVD |
|---|---|---|---|---|---|
| | | SEE SHEET 1. | | | |

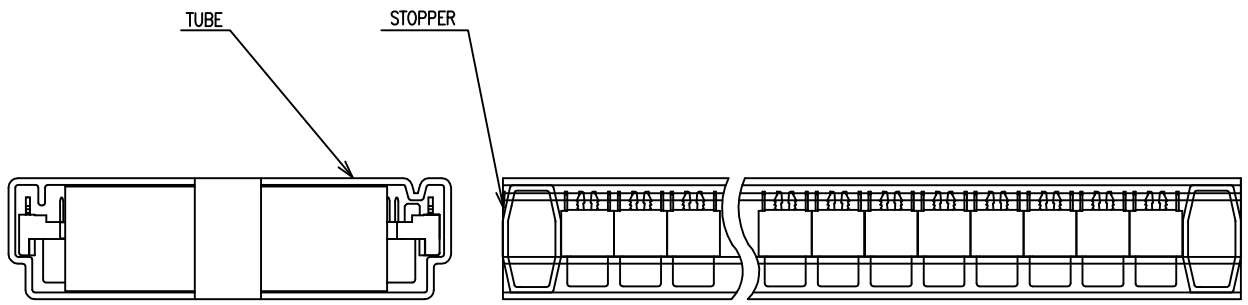


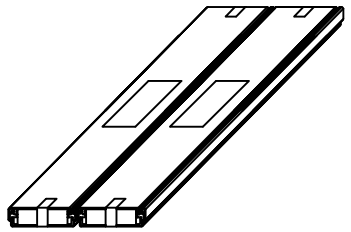

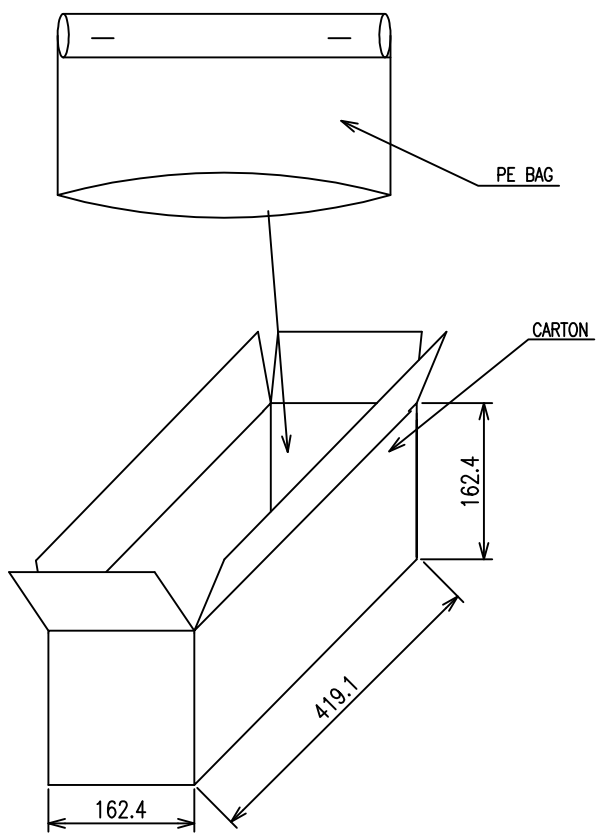


| G.W./CARTON (KG) | N.W./CARTON (KG) | PCS/TUBE | TUBES/CARTON | QUANTITY/CARTON (PCS) | PART NUMBER | POS. |
|---|---|---|---|---|---|---|
| OBSOLETE | | | | | ~~5-1734101-3~~ | |
| | | | | | ~~3-1734101-3~~ | |
| 4.21 | 2.89 | 54 | 8 | 432 | 1-1734101-3 | 120 |
| | | | | | 5-1734101-2 | |
| | | | | | 3-1734101-2 | |
| | | | | | 1-1734101-2 | |
| OBSOLETE | | | | | ~~5-1734101-1~~ | |
| | | | | | ~~3-1734101-1~~ | |
| 6.84 | 4.92 | 54 | 16 | 864 | 1-1734101-1 | 100 |
| | | | | | 5-1734101-0 | |
| | | | | | 3-1734101-0 | |
| | | | | | 1-1734101-0 | |
| OBSOLETE | | | | | ~~5-1734101-8~~ | |
| | | | | | ~~3-1734101-8~~ | |
| 5.61 | 4.06 | 54 | 16 | 864 | 1-1734101-8 | 80 |
| | | | | | 4-1734101-8 | |
| | | | | | 6-1734101-8 | |
| | | | | | 1734101-8 | |
| 5.05 | 3.63 | 54 | 16 | 864 | 4-1734101-7 | 68 |
| | | | | | 6-1734101-7 | |
| | | | | | 1734101-7 | |
| 4.65 | 3.23 | | | | 7-1734101-7 | |
| 4.28 | 3.11 | 54 | 16 | 864 | 4-1734101-6 | 60 |
| | | | | | 6-1734101-6 | |
| | | | | | 1734101-6 | |
| 4.72 | 3.42 | | | | 2-1734101-7 | 50 |
| OBSOLETE | | | | | ~~5-1734101-7~~ | |
| | | | | | ~~3-1734101-7~~ | |
| 5.32 | 4.02 | 54 | 24 | 1296 | 1-1734101-7 | |
| | | | | | 4-1734101-5 | |
| | | | | | 6-1734101-5 | |
| | | | | | 1734101-5 | |
| 4.42 | 3.37 | 54 | 24 | 1296 | 4-1734101-4 | 40 |
| | | | | | 6-1734101-4 | |
| | | | | | 1734101-4 | |
| 6.25 | 5.36 | 54 | 32 | 1728 | 4-1734101-3 | 30 |
| | | | | | 6-1734101-3 | |
| | | | | | 1734101-3 | |

THIS DRAWING IS A CONTROLLED DOCUMENT.

DIMENSIONS: MM

TOLERANCES UNLESS OTHERWISE SPECIFIED:
0 PLC ± –
1 PLC ± –
2 PLC ± –
3 PLC ± –
4 PLC ± –
ANGLES ± –

MATERIAL –

FINISH –

DWN
CHK
APVD
PRODUCT SPEC –
QUALIFICATION TEST REPORT –
WEIGHT –

TE Connectivity

NAME
RECEPTACLE ASSEMBLY,
VERTICAL, BOARD-TO-BOARD,
CHAMP.050, SERIES I,

| SIZE | CAGE CODE | DRAWING NO | RESTRICTED TO |
|---|---|---|---|
| A3 | 00779 | C-1734101 | – |

CUSTOMER DRAWING | SCALE – | SHEET 3 OF 4 | REV E2

THIS DRAWING IS UNPUBLISHED. RELEASED FOR PUBLICATION AUG ,2006.
© COPYRIGHT – BY TYCO ELECTRONICS CORPORATION. ALL RIGHTS RESERVED.

| LOC | DIST |
|---|---|
| DW | – |

REVISIONS

| P | LTR | DESCRIPTION | DATE | DWN | APVD |
|---|---|---|---|---|---|
| | | SEE SHEET 1. | | | |

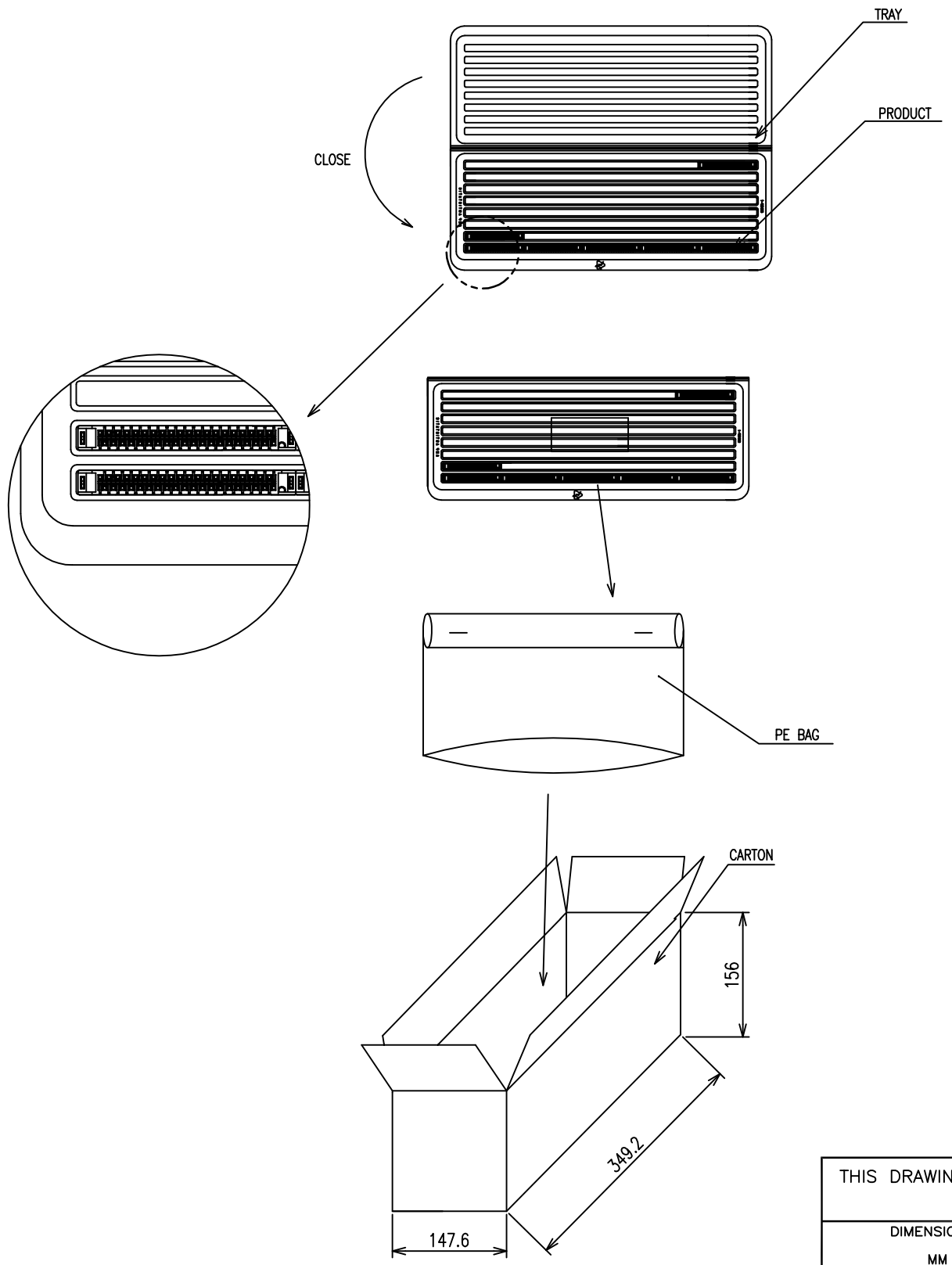


| | G.W./CARTON (KG) | N.W./CARTON (KG) | PCS/TRAY | TRAYS/CARTON | QUANTITY/CARTON (PCS) | PART NUMBER | POS. |
|---|---|---|---|---|---|---|---|
| OBSOLETE | 2.69 | 1.71 | 16 | 10 | 160 | ~~5-1734101-6~~ | 200 |
| | | | | | | ~~3-1734101-6~~ | |
| | | | | | | ~~1-1734101-6~~ | |
| | | | | | | ~~5-1734101-5~~ | |
| | | | | | | ~~3-1734101-5~~ | |
| | | | | | | ~~1-1734101-5~~ | |
| | 2.37 | 1.39 | 16 | 10 | 160 | 5-1734101-4 | 160 |
| | | | | | | 3-1734101-4 | |
| | | | | | | 1-1734101-4 | |
| OBSOLETE | ~~2.48~~ | ~~1.50~~ | ~~32~~ | ~~10~~ | ~~320~~ | ~~4-1734101-9~~ | 80 |
| | | | | | | ~~6-1734101-9~~ | |
| | | | | | | 1734101-9 | |

THIS DRAWING IS A CONTROLLED DOCUMENT.

DIMENSIONS: MM

TOLERANCES UNLESS OTHERWISE SPECIFIED:
0 PLC ± –
1 PLC ± –
2 PLC ± –
3 PLC ± –
4 PLC ± –
ANGLES ± –

MATERIAL –

FINISH –

DWN
CHK
APVD
PRODUCT SPEC –
QUALIFICATION TEST REPORT –
WEIGHT –

TE Connectivity

NAME
RECEPTACLE ASSEMBLY,
VERTICAL, BOARD-TO-BOARD,
CHAMP.050, SERIES I,

| SIZE | CAGE CODE | DRAWING NO | RESTRICTED TO |
|---|---|---|---|
| A3 | 00779 | C-1734101 | – |

CUSTOMER DRAWING | SCALE – | SHEET 4 OF 4 | REV E2

AMP 1470-19 REV 31MAR2000