MICRO SWITCH
A DIVISION OF MINNEAPOLIS-HONEYWELL REGULATOR COMPANY
FREEPORT, ILLINOIS
FED. MFR. CODE 91929

SWITCH—ENCLOSED

CATALOG LISTING
OP-AR16

THIS DRAWING COVERS A PROPRIETARY ITEM AND IS THE PROPERTY OF MICRO SWITCH, A DIVISION OF HONEYWELL. THIS DRAWING IS NOT TO BE COPIED OR USED WITHOUT THE APPROVAL OF MICRO SWITCH.

(M) OP-AR16 ISSUE 2 | REPLACES | OP-AR16 | M | RELEASE NO. | DRAWING NUMBER | ISSUE | CHECK | 7 SEPT. 55 | A.C. | 7 SEPT. 55 | CHECK | 5 SEPT. 55 | G.C.H. | CHECK | 19 AUG. 55 | R. G. C. | DRAWN

REVISIONS

A	C09182		
B	C.011034	R. L. C. AUG. 55	19
C	CO13827	K. L. F. DEC 56	13
D	CO17653 CO16851	L. S. D. JULY 59	16
	CO16878	M. E. F. DEC. 62	10
	C02603	D. W. C. APR 67	7
	C05987	D. L. F. JUL 69	21
	C05131	J. A. J. NOV 84	5
	C073394	K. E. T. JAN 85	
K	C081637	J. W. SEP 92	26
		GLH MAR 98	18

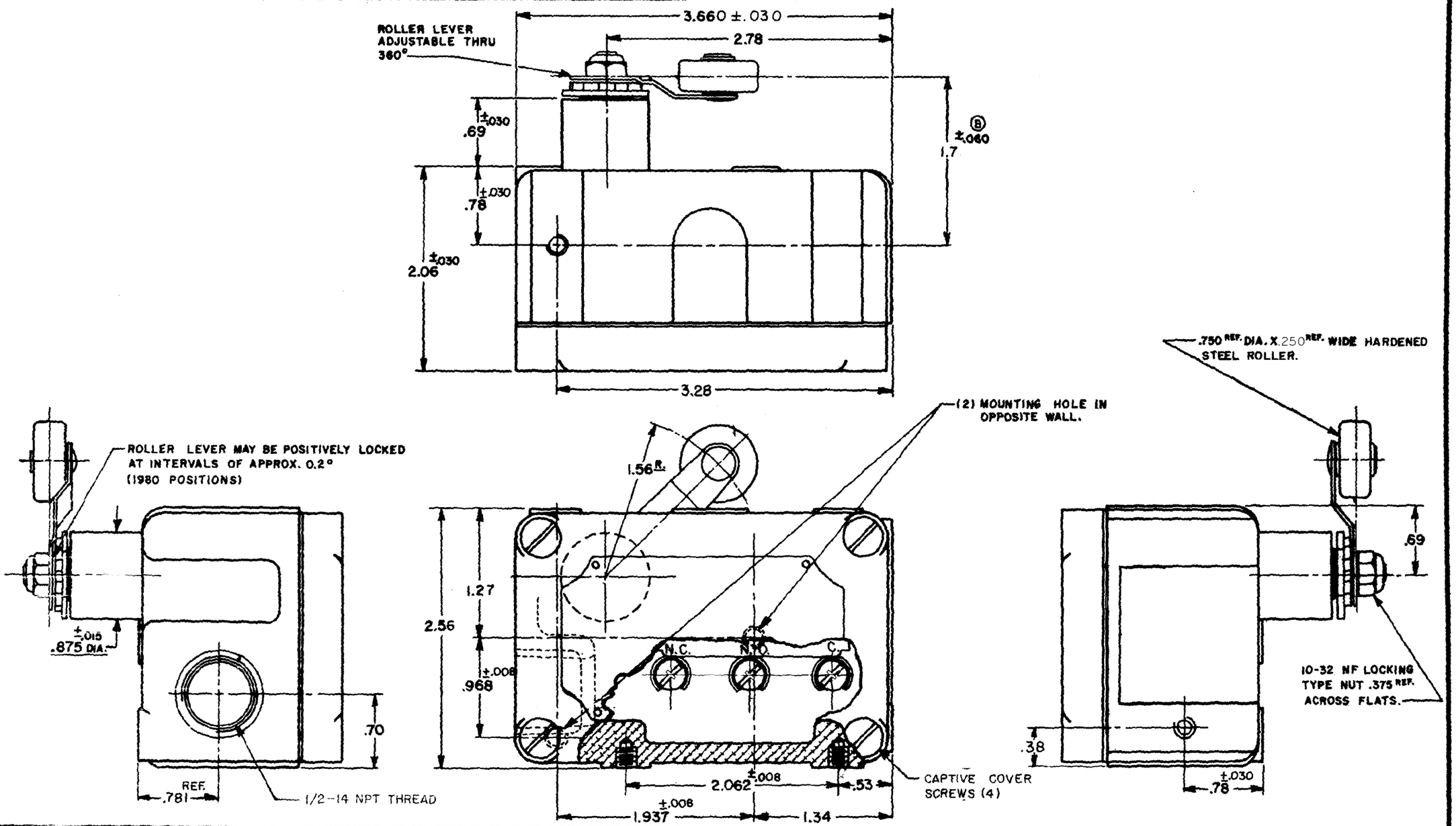

CHARACTERISTICS	ELECTRICAL DATA	SCALE FULL
OPERATING FORCE——— 2 OZ. MAX.	CONTACT ARRANGEMENT S. P. D. T.	DO NOT SCALE PRINT
PRETRAVEL——— SEE NOTES 5,6 & 7	-L96- 15 A-125, 250, OR 480 VAC; 1/2 A-125 VDC; 1/4 A-250 VDC; 1/8 HP-125 VAC; 1/4 HP-250 VAC	UNLESS OTHERWISE SPECIFIED DIMENSIONS ARE IN INCHES
OVERTRAVEL——— SEE NOTES 5,6 & 7		TOLERANCES ARE: ONE PLACE (.0) ±.030; TWO PLACE (.00) ±.016; THREE PLACE (.000) ±.008; ANGLES ±
BASIC SWITCH REPLACEMENT SZ-2RW88-P5		WEIGHT

NOTE—
1-SEALED CONSTRUCTION PROVIDES SPLASH RESISTANCE.
2-(6) MOUNTING SCREW HOLES, 10-32 NF-2B THREADS X .219 REF. DEEP.
3-8-32 NC X .219 REF. BINDER HEAD TERMINAL SCREWS AND CUPWASHERS.
4-LEVER ROTATION IS NOT RESTRICTED IN EITHER DIRECTION.
5-CIRCUIT IS MADE THROUGH THE NORMALLY CLOSED CONTACTS FOR APPROX. 90° ROTATION OF THE LEVER AND THROUGH THE NORMALLY OPEN CONTACTS FOR APPROX. 270° ROTATION.
6-UNIT PROVIDES NO LEVER RESTORING FORCE. THE ACTUATING DEVICE MUST CONTROL MOVEMENT OF THE LEVER.

74-943