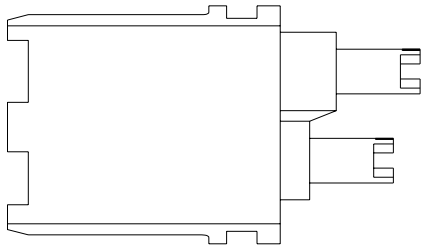

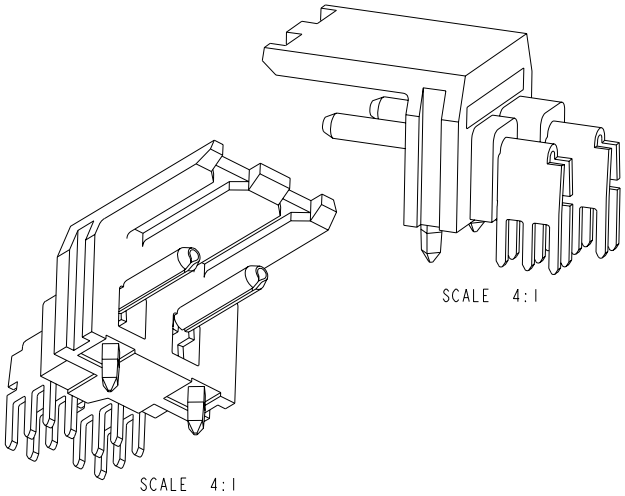

PCB LAYOUT
(CONNECTOR SIDE VIEW)
SCALE 4:1

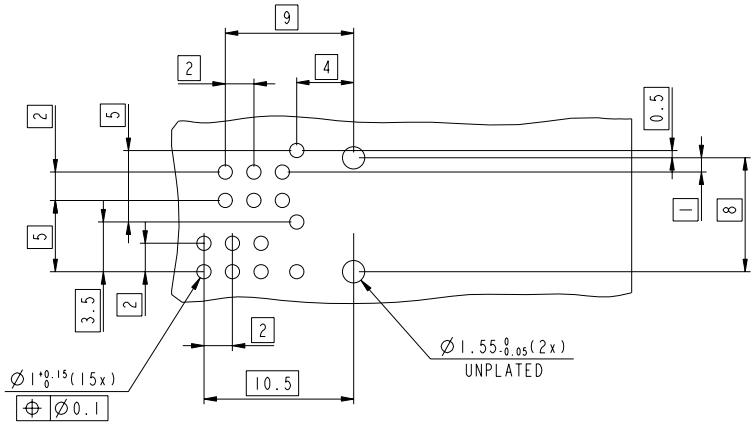

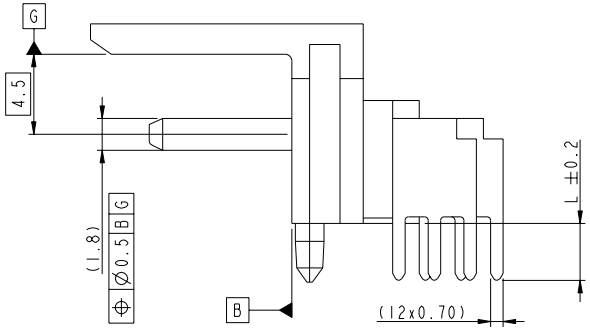

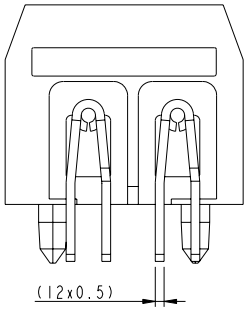

NOTA:
1. BODY MATERIAL: LIQUID CRYSTAL POLYMER 30% GLASS
   FLAME RETARDENT ACC. UL 94 V0
2. TERMINAL MATREIAL: BRONZE PLATING
   Ni + GOLD ON MATING AREA
   Ni + SnPb ON TERMINATION
3. PACKAGING SPECIFICATION EUR-14-005
4. PRODUCT SPECIFICATION GS-12-308.
5. VOLTAGE PROOF 1000 V
6. CURRENT CAPACITY 10 A MAXI
7. CONTACT RESISTANCE 10 mOHM MAXI
8. INSULATION RESISTANCE 5000 MOHM INITIAL MINI

9-ROHS INFORMATION:

-THIS PRODUCT MEETS EUROPEAN UNION DIRECTIVES AND OTHER COUNTRY REGULATIONS AS DESCRIBED IN GS-22-008.
-THE HOUSING WILL WITHSTAND EXPOSURE TO 260°C PEAK TEMPERATURE FOR 10 SECOND IN A WAVE SOLDER APPLICATION WITH A 1.6MM MINMUM THICK CIRCUIT BOARD.SEE APPLICATION NOTES/PROCEDURES IF THEY ARE AVAILABLE.PACKAGING SPEC:GS-14-920.

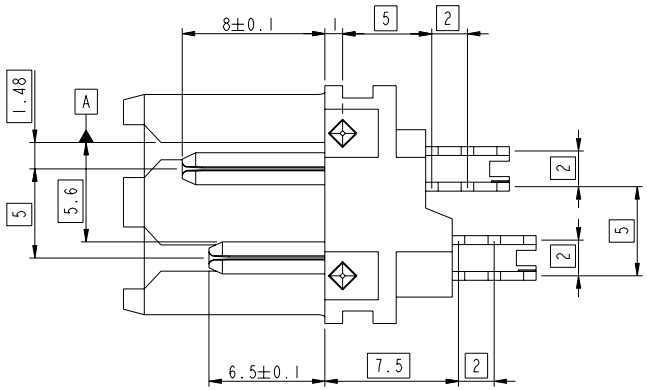

Product Number	L
72841-202LF	2.2
72841-203LF	2.7

rev	ecn no	dr	date
A	-	MLE	2004-08-18
B	LS05-0080	JTA	2005-11-29
C	L06-0084	LGO	2006-07-01
D	LS06-0143	LGO	2006-09-25
E	N11-0071	A.ZH	2011-03-24
-	-	-	-
-	-	-	-

www.fciconnect.com

Dr	LENOIR		
Eng	LENOIR	2004/08/18	
Chr	LEGARE	2004/08/18	
Appr	LEGARE	2004/08/18	

surface - ISO 1302 | tolerance std ISO 406 ISO 1101 | projection | MM

TOLERANCES UNLESS OTHERWISE SPECIFIED

ANGULAR		LINEAR		
0°	±2°	0.X	±0.3	
		0.XX	±0.1	
		0.XXX	±0.05	

size A2 | Scale 4:1

Product family SOFIX | Spec ref RELEASE | ECN N11-0071

title RA HDR POWER ASSY
-

dwg no 72841C | Rev. E

catalog no See Table | CUSTOMER COPY | sheet 1 of 1

Copyright FCI.

REV F - 2006-04-17

PDM: Rev:E STATUS:Released Printed: Mar 31, 2011