SHEET OF

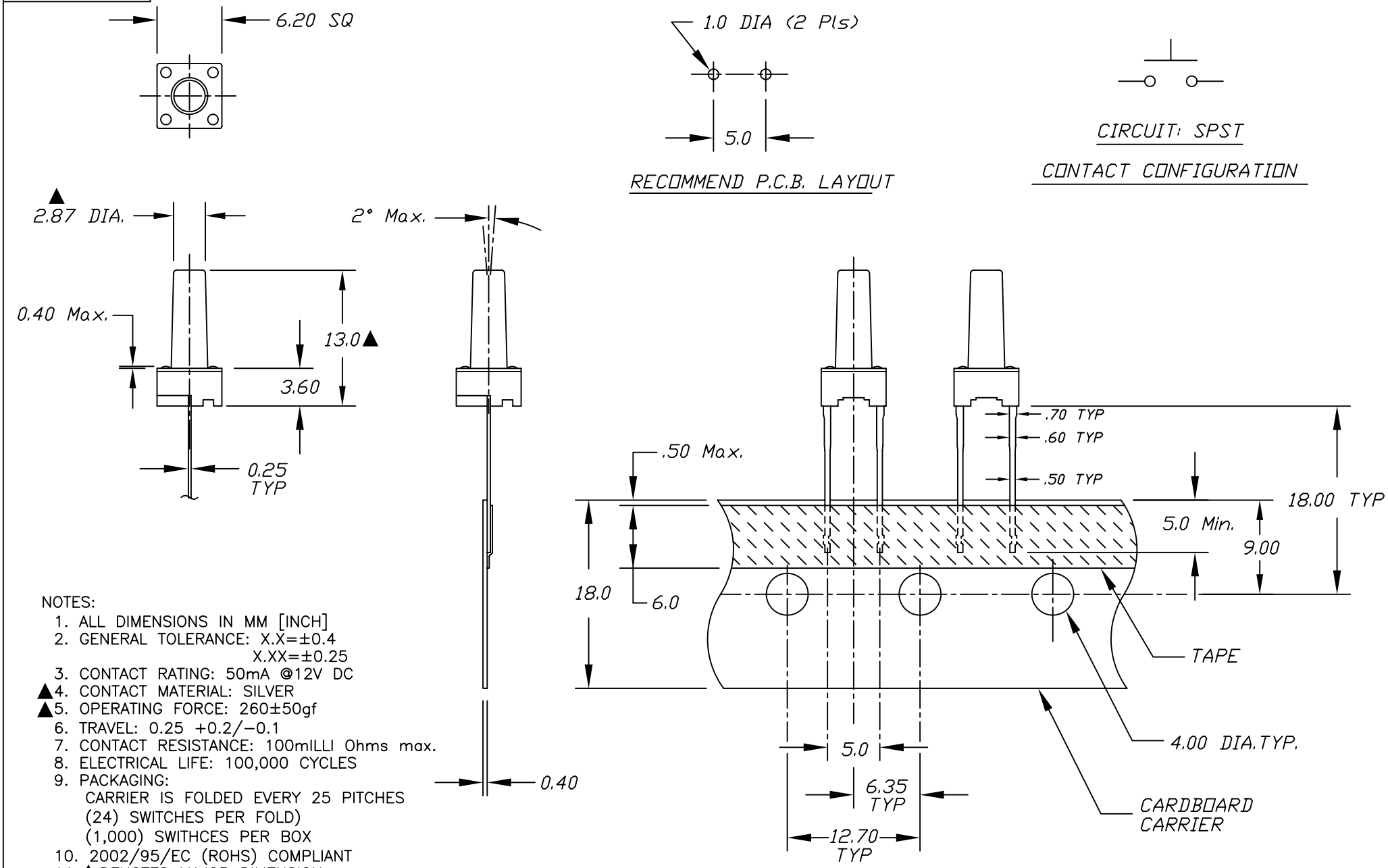

NOTES:
1. ALL DIMENSIONS IN MM [INCH]
2. GENERAL TOLERANCE: X.X=±0.4
   X.XX=±0.25
3. CONTACT RATING: 50mA @12V DC
▲4. CONTACT MATERIAL: SILVER
▲5. OPERATING FORCE: 260±50gf
6. TRAVEL: 0.25 +0.2/−0.1
7. CONTACT RESISTANCE: 100mILLI Ohms max.
8. ELECTRICAL LIFE: 100,000 CYCLES
9. PACKAGING:
   CARRIER IS FOLDED EVERY 25 PITCHES
   (24) SWITCHES PER FOLD)
   (1,000) SWITHCES PER BOX
10. 2002/95/EC (ROHS) COMPLIANT
11. ▲ DENOTES MAJOR DIMENSION.

REV.	ECN No.	DESCRIPTION	DATE	CHKD
C	16895	UPDATE NOTES, .30 TO .25 DIM.	1/19/07	TN
B	10159	REVISED & REDRAWN	3/22/99	

THE INFORMATION CONTAINED IN THIS DOCUMENT IS PROPRIETARY TO E-SWITCH AND IS NOT TO BE COPIED OR TRANSFERRED

E-SWITCH®

TITLE				
TL59DF260Q				
SCALE 2:1	DATE 1/19/2007	DR TN	DWG P010574	REV C