REV.	DATE	ECR NO.	DESCRIPTION
NC	07/06/12	XXXXXX	INITIAL RELEASE
A	08/20/12	XXXXXX	UPDATE NOTE 4
B	09/19/12	2373	CHANGE THE DESIGN

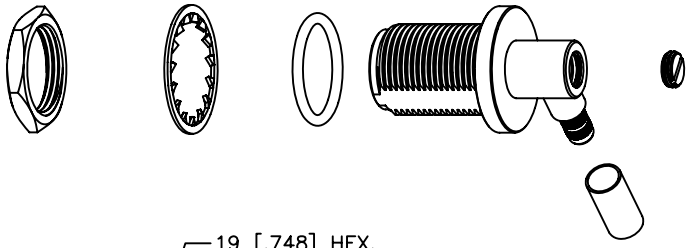

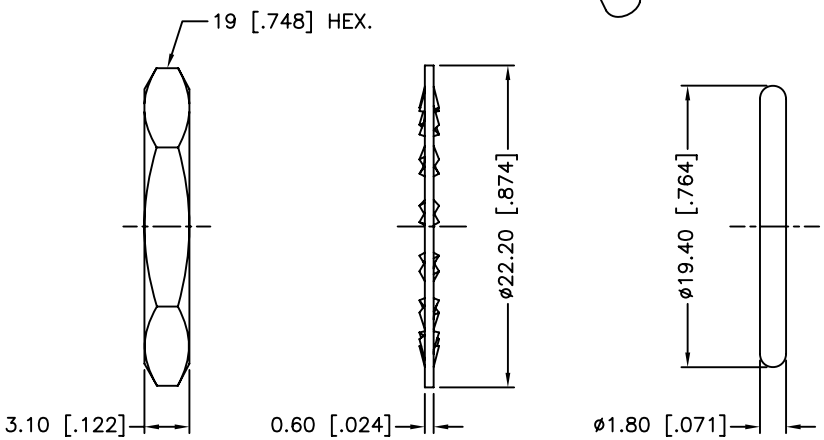

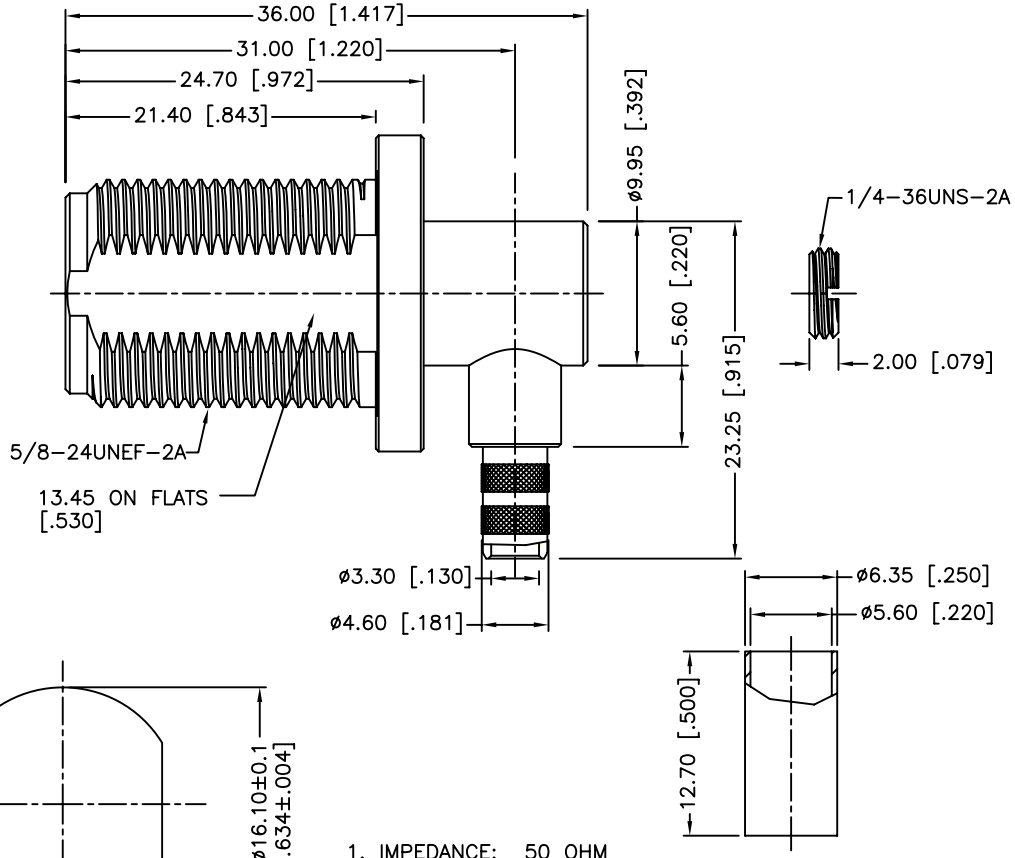

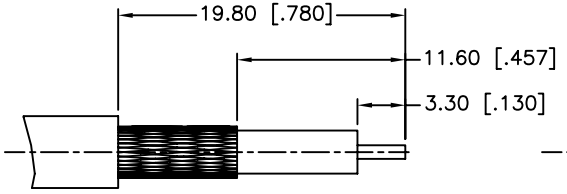

RECOMMENDED
CABLE STRIPPING DIM'S

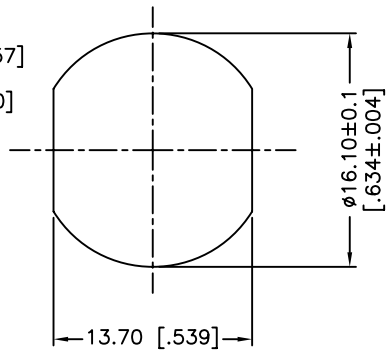

RECOMMENDED
MOUNTING HOLE

1. IMPEDANCE: 50 OHM
2. FREQUENCY RANGE: DC–6 GHz
3. VSWR: 1.3 MAX.
4. DIELECTRIC WITHSTANDING VOLTAGE: 1500 VRMS, MIN.
5. DURABILITY: 500 CYCLES MIN.
6. TEMPERATURE RANGE: –65°C TO +165°C
7. CRIMPED FERRULE:
   HEX. CRIMP SIZE .213"
8. CONTACT PIN MUST BE SOLDERED
9. MAX. PANEL THICKNESS=7mm

	DESCRIPTION	MATERIAL	FINISH	QTY
9	FERRULE	BRASS	NEXCOTE	1
8	HEX NUT	BRASS	NEXCOTE	1
7	LOCK WASHER	BRASS	NEXCOTE	1
6	GASKET	SILICON RUBBER	RED	1
5	COVER	BRASS	NEXCOTE	1
4	INSULATOR	PTFE	NATURAL	1
3	CONTACT PIN	PHOSPHOR BRONZE	GOLD	1
2	INNER BODY	BRASS	NEXCOTE	1
1	BODY	BRASS	NEXCOTE	1

UNLESS OTHERWISE SPECIFIED DIMENSIONS ARE IN MILLIMETERS. DIMENSIONS IN [ ] ARE IN INCHES AND FOR CUSTOMER REFERANCE ONLY.

UNLESS OTHERWISE SPECIFIED TOLERANCES FOR MILLIMETERS ARE:
0.5 – 8mm ± 0.20mm
8 – 30mm ± 0.40mm
30 – 120mm ± 0.50mm

UNLESS OTHERWISE SPECIFIED TOLERANCES FOR INCHES ARE:
.020 – .315 = ± 0.007"
.315 – 1.180 = ± 0.015"
1.180 – 4.724 = ± 0.020"

DO NOT SCALE DRAWING

APPROVALS		DATE
DRAWN	M.ZHANG	09/19/12
CHECKED		
ISSUED		
SHEET	1 OF 1	

CAD FILE C:/CONNEX/172368.DWG

Amphenol Connex

PART DESCRIPTION
N BULKHEAD R/A JACK
(FOR LMR-195 CABLE)

PART NO. 172368

DWG. NO. 172368.DWG | REV. B | SIZE A | SCALE NA