THIS DRAWING IS UNPUBLISHED. RELEASED FOR PUBLICATION -,- .
© COPYRIGHT - By - ALL RIGHTS RESERVED.

LOC	DIST
G	86

REVISIONS

P	LTR	DESCRIPTION	DATE	DWN	APVD
	C2	REVISED PER ECO-11-004820	11MAR11	RK	HMR

1 MATING TAB THICKNESS .032

2 ASTERISK * FOR PHOS BRONZE ITEMS ONLY.

3 WIRE INSULATION DIA TO BE .140 MAX

4 MAX RECOMMENDED OPERATING TEMP IS 105°C OR 221°F

5 VOLTAGE RATING IS 300V MAX

6 CIRCULAR MIL AREA 0.3-1,5mm2 [592-2960]

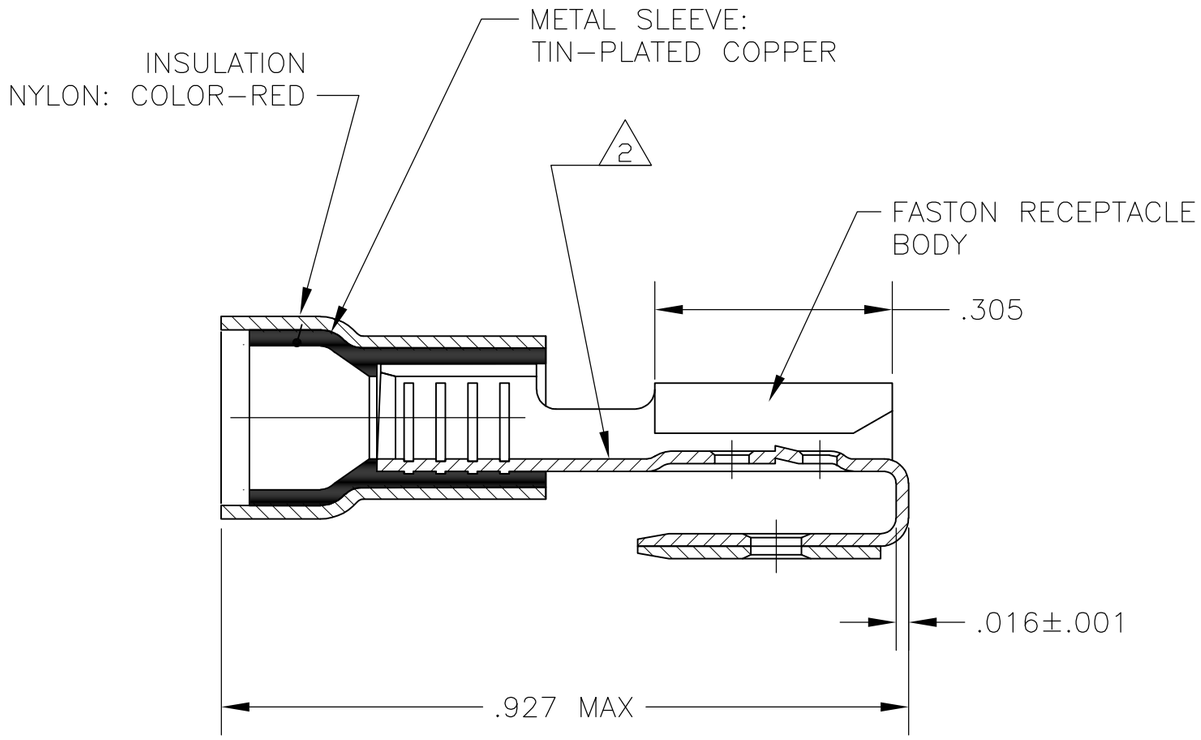

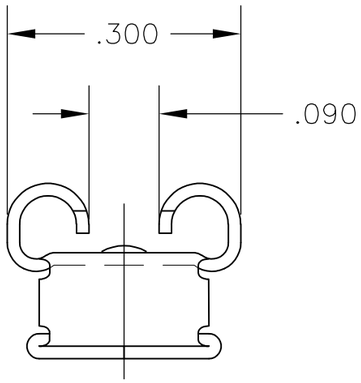

TIN PLATING	PHOS BRONZE 2	160834-5
TIN PLATING	BRASS	160834-2
FINISH - TERMINAL	FASTON RECEPTACLE MATERIAL	PART NO

THIS DRAWING IS A CONTROLLED DOCUMENT.

DIMENSIONS: INCHES

TOLERANCES UNLESS OTHERWISE SPECIFIED:

0 PLC	± -
1 PLC	± -
2 PLC	± .02
3 PLC	± .008
4 PLC	± -
ANGLES	± 0°30'

MATERIAL: SEE TABLE

FINISH: SEE TABLE

DWN jr ruth 22FEB06
CHK T MICHIELUTTI 22FEB06
APVD T MICHIELUTTI 22FEB06
PRODUCT SPEC —
APPLICATION SPEC —
WEIGHT —

TE Connectivity

NAME: 250 SERIES P.I.D.G. FASTON REC, ASS'Y, PIGGYBACK, LOOSE PIECE WIRE SIZE: 22-16 AWG

SIZE	CAGE CODE	DRAWING NO	RESTRICTED TO
A3	00779	C-160834	—

CUSTOMER DRAWING | SCALE 5:1 | SHEET 1 OF 1 | REV C2