THIS DRAWING IS UNPUBLISHED. RELEASED FOR PUBLICATION -,- .
© COPYRIGHT - By - ALL RIGHTS RESERVED.

LOC	DIST
CM	00

REVISIONS

P	LTR	DESCRIPTION	DATE	DWN	APVD
	B	REV PER ECR 10-018921	13SEPT10	JR	TM
	B1	REVISED PER ECR-14-004627	04APR14	AV	KD
	B2	REVISED PER ECR-14-013363	09SEP14	AV	KD
	B3	REVISED PER ECR-14-014878	19NOV2014	AV	ZD

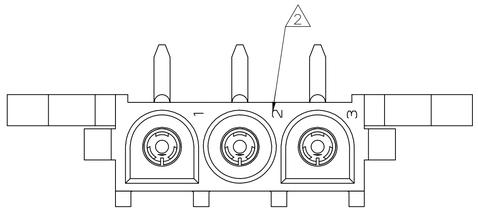

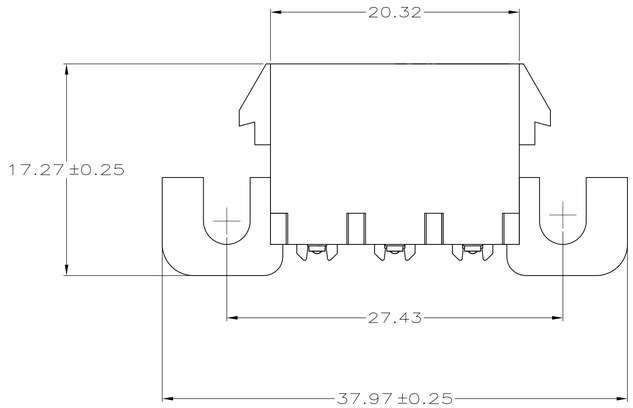

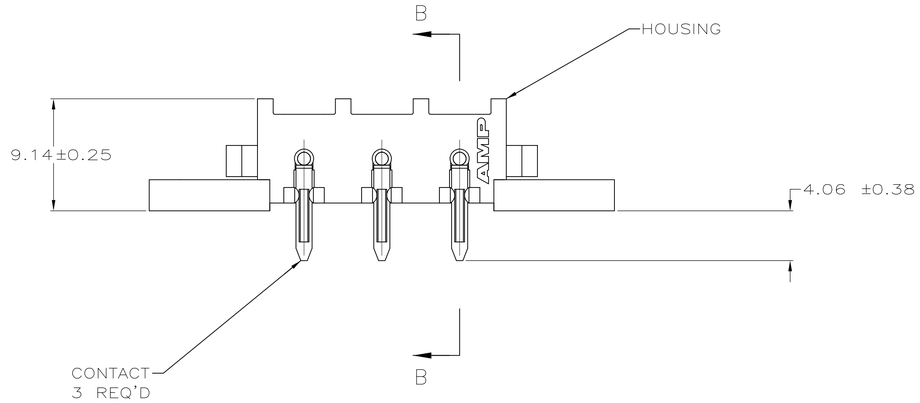

1. PARTS COMPLY WITH TE SOLDERABILITY SPECIFICATION 109-11-5.

2. CIRCUIT IDENTIFICATION CHARACTERS ARE ADJACENT TO THE INDICATED CAVITIES,BUT LOCATION AND ORIENTATION MAY DIFFER FROM PRINT.

3 FLAMMABILITY V2 FOR THICKNESS 0.38mm, 1.5mm, qnd 3.0mm PER IEC 60695-11-10.

4 GLOW-WIRE FLAMMABILITY (GWFI) 800°C FOR THICKNESS 0.38mm AND 0.75mm PER IEC 60695-2-12.

5 GLOW-WIRE FLAMMABILITY (GWFI) 960°C FOR THICKNESS 1.5mm AND 3.0mm PER IEC 60695-2-12.

6 GLOW-WIRE IGNITION (GWIT) 825°C FOR THICKNESS 0.38mm, 0.75mm, 1.5mm AND 3.0mm PER IEC 60695-2-13.

7. MATERIAL CORRESPONDING TO THE REQUIREMENT OF IEC 60335. (INL GLOW WIRE TEST 750°C WITHOUT FLAME)

8. PRELIMINARY PART NOT RELEASED FOR PRODUCTION.

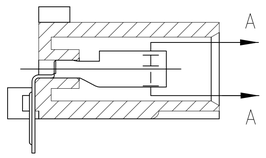

SECTION B-B

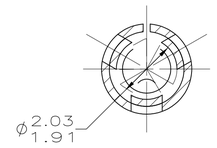

SECTION A-A
SCALE 10:1

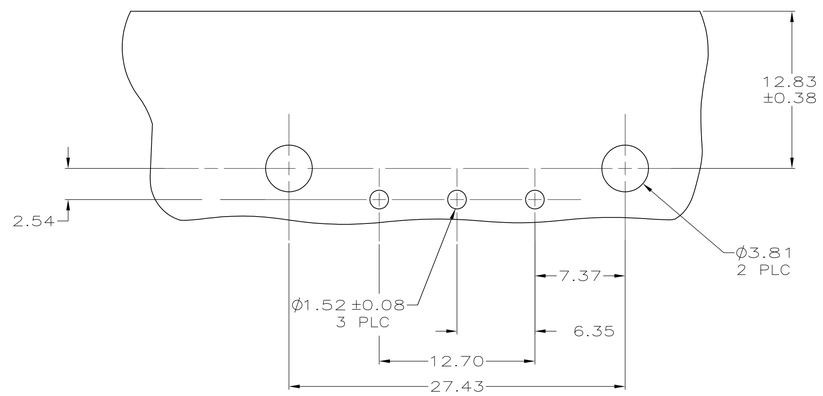

RECOMMENDED MOUNTING HOLE PATTERN
FOR 1.57 THICK P.C. BOARD

2.54	.100		
2.03	.080	37.97	1.495
1.91	.075	27.43	1.080
1.57	.062	20.32	.800
1.52	.060	17.27	.680
1.27	.050	12.83	.505
0.38	.015	12.70	.500
0.25	.010	9.14	.360
0.13	.005	7.37	.290
0.08	.003	6.35	.250
0.00127	.000050	4.06	.160
0.00076	.000030	3.81	.150
MM	IN	MM	IN

CONVERSION TABLE

CONTACT	HOUSING	PART NUMBER
PH BRZ,TIN	NYLON UL 94V-0 7	1586893-3
PH BRZ,TIN	NYLON UL 94V-2 7	1586893-1

THIS DRAWING IS A CONTROLLED DOCUMENT.

DIMENSIONS: mm

TOLERANCES UNLESS OTHERWISE SPECIFIED:
0 PLC ± -
1 PLC ± -
2 PLC ± 0.13
3 PLC ± -
4 PLC ± -
ANGLES ± -

MATERIAL: SEE TABLE
FINISH: SEE TABLE

METRIC

DWN K. WHITAKER 14MAR2008
CHK D. COLEY 14MARCH2008
APVD D. COLEY 14MAR2008
PRODUCT SPEC 108-1053
APPLICATION SPEC 114-1010
WEIGHT -

TE Connectivity

NAME: SOCKET HEADER ASSEMBLY, RIGHT ANGLE MOUNT,3 POSITION, UNIVERSAL MATE-N-LOK(TM)

SIZE A1 | CAGE CODE 00779 | DRAWING NO C-1586893 | RESTRICTED TO -

CUSTOMER DRAWING | SCALE 4:1 | SHEET 1 OF 1 | REV B3

4805 (3/11)