REV.	DATE	DESCRIPTION
A	04/31/03	UPDATE DRAWING FORMAT
B	02/24/04	MODIFY DESCRIPTION

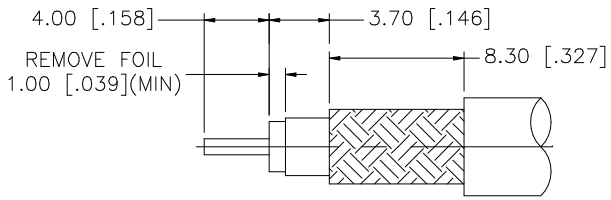

RECOMMENDED
CABLE STRIPPING DIM'S

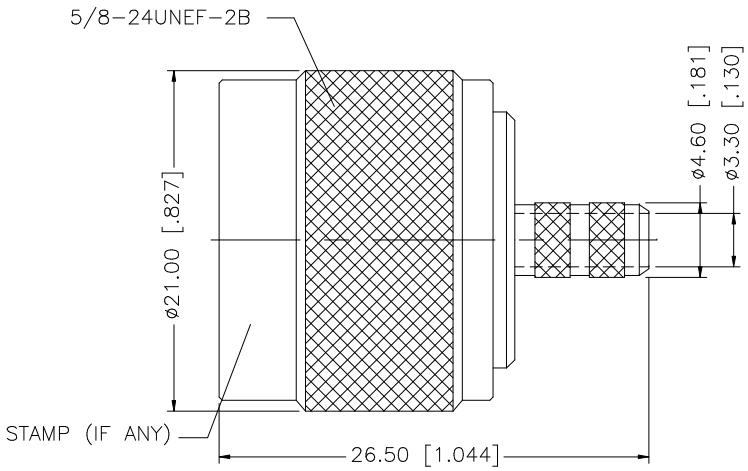

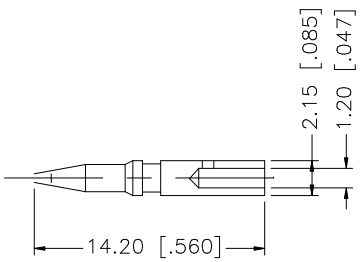

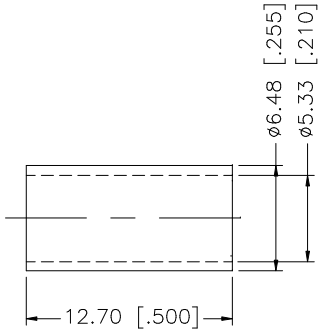

NOTES:

1. CRIMPED FERRULE
   HEX CRIMP SIZE .213"
2. CRIMPED CONTACT PIN
   HEX CRIMP SIZE .068"

	DESCRIPTION	MATERIAL	FINISH	QTY
8				
7				
6				
5				
4	FERRULE	COPPER	NEXCOTE	1
3	CONTACT PIN	BRASS	GOLD	1
2	INSULATOR	TEFLON	NATURAL	1
1	BODY	BRASS	NEXCOTE	1

UNLESS OTHERWISE SPECIFIED DIMENSIONS ARE IN MILLIMETERS. DIMENSIONS IN [ ] ARE IN INCHES AND FOR CUSTOMER REFERANCE ONLY.

UNLESS OTHERWISE SPECIFIED TOLERANCES FOR MILLIMETERS ARE:
0.5 – 8mm ± 0.20mm
8 – 30mm ± 0.40mm
30 – 120mm ± 0.50mm

UNLESS OTHERWISE SPECIFIED TOLERANCES FOR INCHES ARE:
.020 – .315 = ± 0.007"
.315 – 1.180 = ± 0.015"
1.180 – 4.724 = ± 0.020"

DO NOT SCALE DRAWING

APPROVALS		DATE
DRAWN	G.R.S.	02/24/04
CHECKED		
ISSUED		
SHEET	1 OF 1	
CAD FILE	C:/172/172214.DWG	

Amphenol Connex

PART DESCRIPTION: N CRIMP PLUG (LMR200 CABLE)

PART NO. 172214

DWG. NO. 172214.DWG | REV. B | SIZE A | SCALE NA