Alle Rechte vorbehalten/ *All rights reserved*

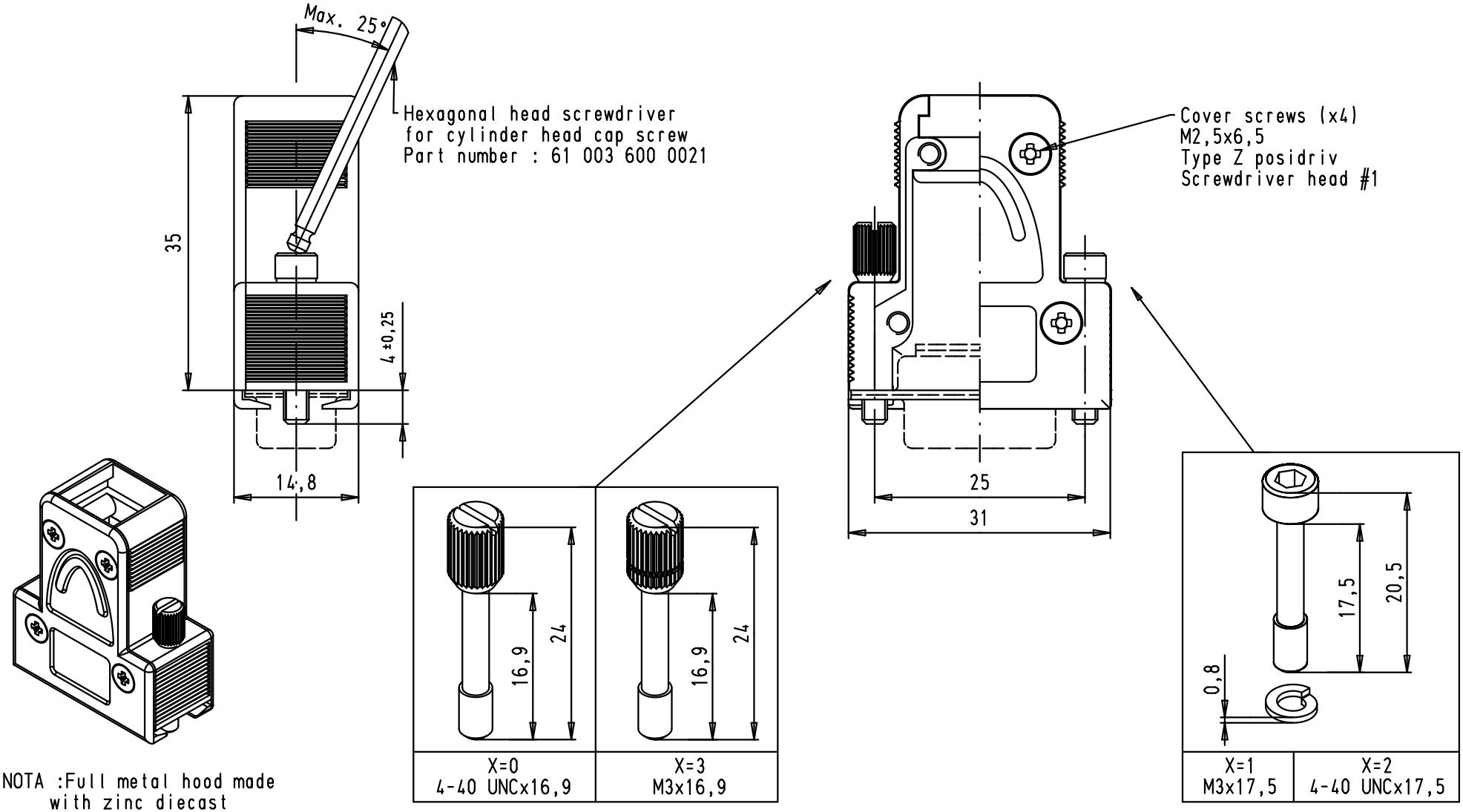

NOTA :Full metal hood made
with zinc diecast

Part number	Screw type	screw size	Mod.	Dat.	Name
61 03 001 X010.010					
61 03 001 3010.010	Knurled thumb screw	M3 x 16,9			
61 03 001 0010.010		4-40 UNC x 16,9			
61 03 001 2010.010	Cylinder socket head cap screw with spring washer [2,6 DIN 127B]	4-40 UNC x 17,5	36163	24/09/10	SC
61 03 001 1010.010		M3 x 17,5	EC00339	24/04/09	PK

	Dat.	Name
Detail.	24/04/09	PK
Insp.		
Stand.		

All Dim. in mm
Orig. Size DIN A 4

INDUCOM - 9 poles, full metal hood for D-Sub, straight cable entry, without internal grounding block

Maßstab/ *Scale* 1,5:1

HARTING EURL
F-95972 Paris

TB 61 03 001 X010.010

Sub.

Blatt/ *Page* 1/1