THIS COPY IS PROVIDED ON A RESTRICTED BASIS AND IS NOT TO BE USED IN ANY WAY DETRIMENTAL TO THE INTERESTS OF PANDUIT CORP.

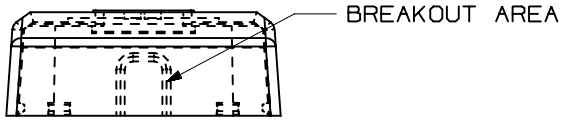

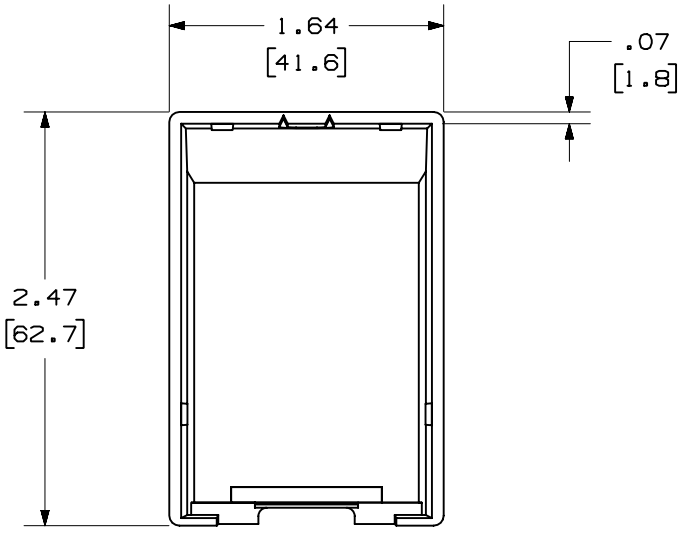

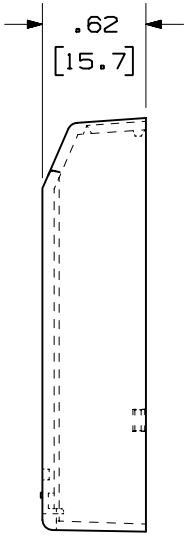

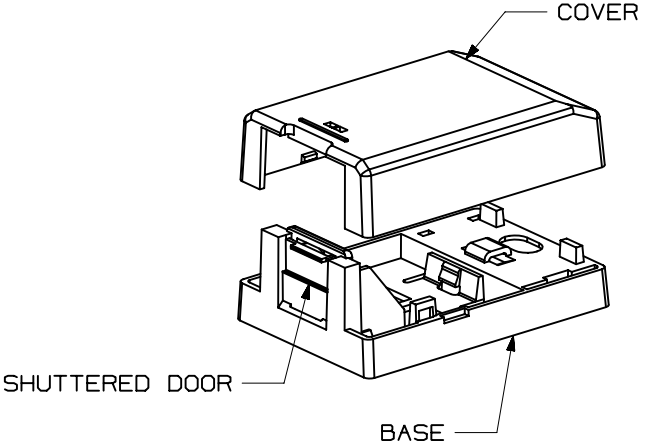

REV	DATE	BY	CHK	DESCRIPTION	ECN	CHK	CUST	SUP
R	3-15-01	JsP		SEE SHEET 1 OF 2	00800-21			

CAD FILENAME/LAYERS: M00800AD_DC_01A.PRT

PANDUIT CORP. TINLEY PARK, ILLINOIS

MINI-COM 1 POSITION
SHUTTERED BOX (CBXS1**)
CUSTOMER DRAWING

UNLESS OTHERWISE SPECIFIED, DIMENSIONAL TOLERANCES ARE:
(.X) ± (.XXX) ±.010(.3)
(.XX) ±.03(.8) ANGLES ±

UNLESS OTHERWISE SPECIFIED, ALL DIMENSIONS ARE GIVEN IN INCHES, THIRD ANGLE PROJECTION.

DRAWN BY: JsP
DATE: 3-15-01
CHECKED BY:
MAT'L: ABS
SCALE: NONE
DRAWING NO. 00800-21
SHEET 2 OF 2
DWG SIZE: A

THIS COPY IS PROVIDED ON A RESTRICTED BASIS AND IS NOT TO BE USED IN ANY WAY DETRIMENTAL TO THE INTERESTS OF PANDUIT CORP.

PANDUIT P/N	WEIGHT
CBXS1**-A	.40 LB/10 PCS (181.9 g/10 PCS)

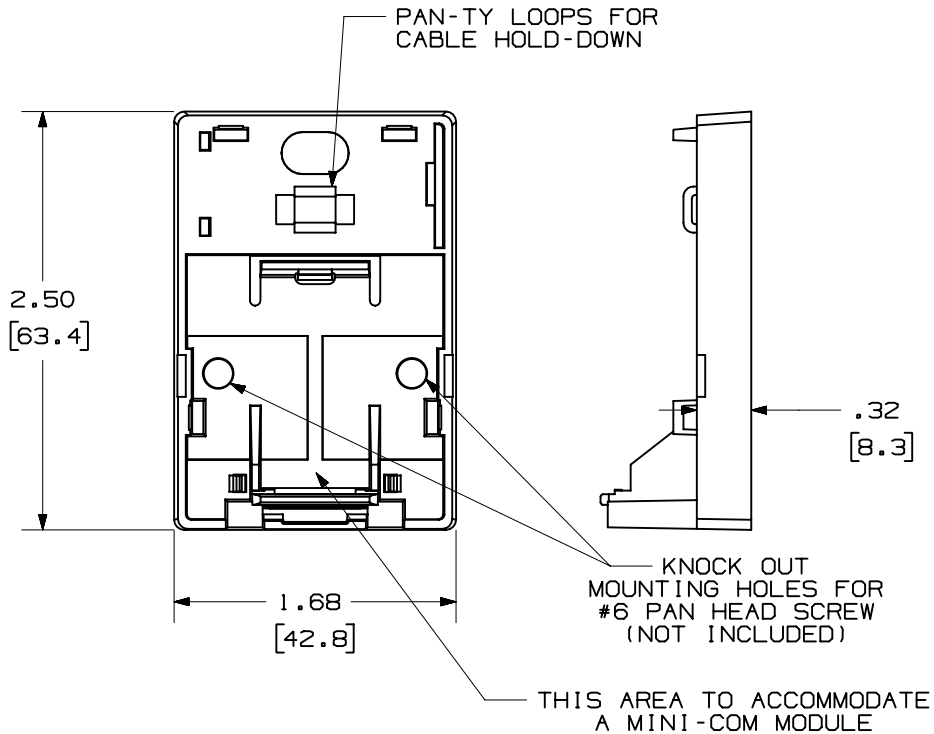

NOTES:
1. SEE CURRENT CATALOG FOR ADDITIONAL PART NUMBER SUFFIXES TO INDICATE COLOR AND OR PACKAGE QUANTITY.
2. SEE CATALOG FOR A COMPLETE LIST OF PARTS APPLICABLE FOR USE WITH THIS PART.
3. DIMENSIONS IN PARENTHESES ARE IN METRIC.
4. ALSO INCLUDED WITH BOX:
   a. (1) PLT1M-M PAN-TY
   b. (1) STRIP OF 1.00" X .75" FOAM TAPE FOR MOUNTING
5. BASE HAS 1 POCKET FOR OPTIONAL MAGNET (CSBM-X)
6. BREAKOUTS DESIGNED TO ACCEPT LD5/LDP5 RACEWAY. (DOES NOT ENTER BOX.)

NO WARRANTY, EXPRESSED OR IMPLIED, IS MADE BY PANDUIT WITH RESPECT TO ADHESIVE BOND PERFORMANCE. AMONG OTHER THINGS, THE CONDITIONS UNDER WHICH THESE MOUNTS MAY BE APPLIED AND/OR THE SURFACE TO WHICH THEY MAY BE APPLIED ARE BEYOND PANDUIT'S CONTROL.

REV	DATE	BY	CHK	DESCRIPTION	ECN	CHK	CUST	SUP
R	3-15-01	JsP		RELEASED TO PRODUCTION.	00800-21			

CAD FILENAME/LAYERS: M00800AD_DC_01A.PRT

PANDUIT CORP. TINLEY PARK, ILLINOIS

MINI-COM 1 POSITION
SHUTTERED BOX (CBXS1**-A)
CUSTOMER DRAWING

UNLESS OTHERWISE SPECIFIED, DIMENSIONAL TOLERANCES ARE:
(.X) ± (.XXX) ±.010(.3)
(.XX) ±.03(.8) ANGLES ±

UNLESS OTHERWISE SPECIFIED, ALL DIMENSIONS ARE GIVEN IN INCHES, THIRD ANGLE PROJECTION.

DRAWN BY: JsP
DATE: 3-15-01
CHECKED BY:

MAT'L:
BOX: ABS
DOORS: HIPS

SCALE: NONE
DRAWING NO.: 00800-21
SHEET 1 OF 2
DWG SIZE: A