THIS DRAWING IS UNPUBLISHED. RELEASED FOR PUBLICATION -,- .
© COPYRIGHT - By - ALL RIGHTS RESERVED.

REVISIONS					
P	LTR	DESCRIPTION	DATE	DWN	APVD
	AB	REV PER ECO 17-000132	5-1-17	CT	DM

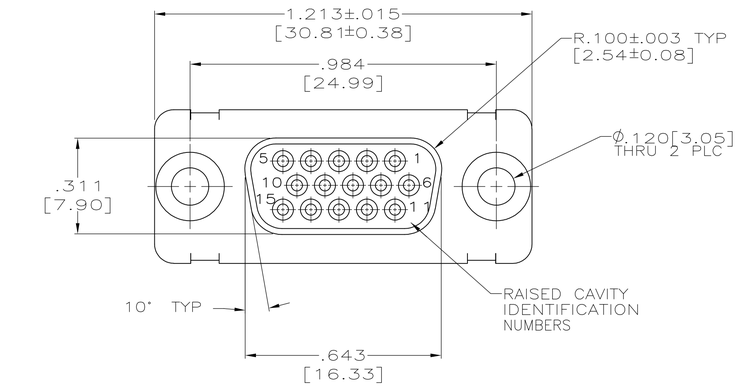

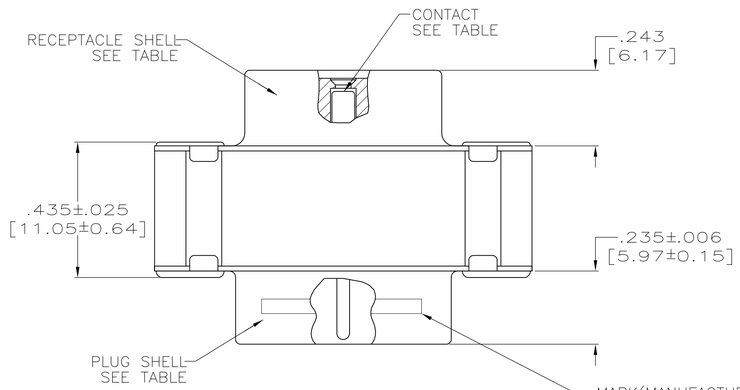

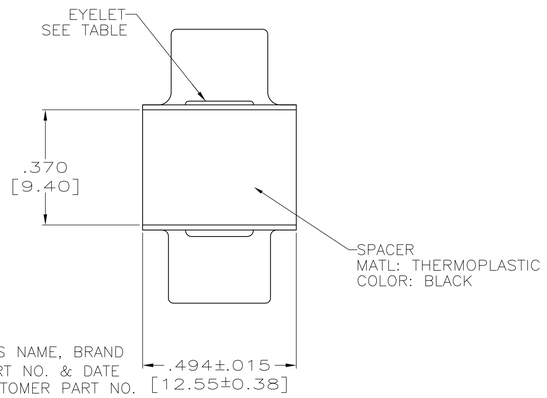

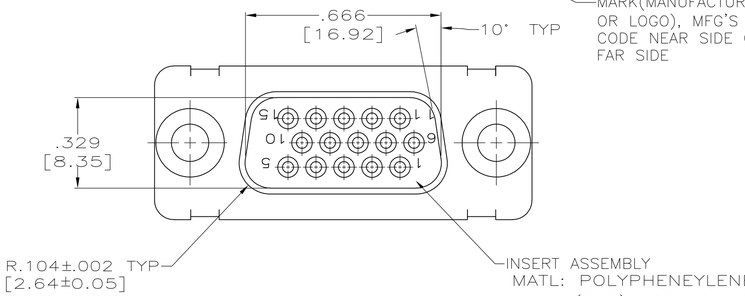

1 CONTACTS INCLUDED IN ASSEMBLY.

2 MATL: STEEL, PER ASTM-A-109.

3 FINISH: CADIUM PER QQ-P-416.

4 CONTACT
BODY MATL: BERYLLIUM COPPER PER ASTM-B-197.
BODY FINISH: PLATED GOLD, .000050 MIN THK PER MIL-G-45204 OVER NICKEL, .000050 MIN THK PER QQ-N-290.

HOOD MATL: STAINLESS STEEL PER ASTM-A-167.
HOOD FINISH: PASSIVATED PER ASTM-A-380

5 FINISH: PLATED ZINC .00020 MIN THK PER ASTM-B-633. YELLOW CHROMATE FINISH.

6 MATL: BRASS PER ASTM-B-36.

7 FINISH: PLATED GOLD, .000050 MIN THK PER MIL-G-45204 OVER COPPER, .000100 MIN THK PER MIL-C-14550.

8 CONTACT
BODY MATL: BERYLLIUM COPPER PER ASTM-B-197.
BODY AND HOOD FINISH: PLATED GOLD, .000050 MIN THK PER MIL-G-45204 OVER COPPER, .000100 MIN THK PER MIL-C-14550.
HOOD MATL: BRASS PER ASTM-B-36

9 FINISH: PLATED ZINC PER ASTM-B-633 .000200 MIN THK WITH SUPPLEMENTARY CHROMATE (Cr3+).

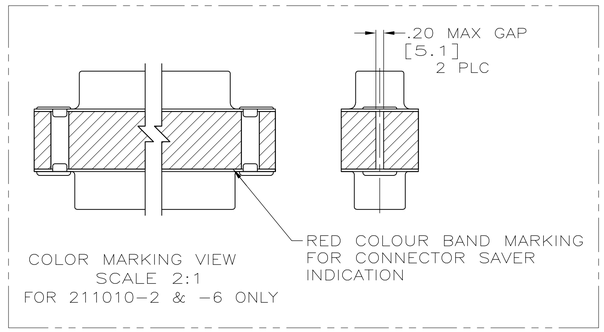

EYELET	SHEELS	CONTACT	CUSTOMER P/N	PART NO.
6 9	2 9	4	–	5-211010-1
6 7	6 7	4	R10002677-0106	211010-6
6 7	6 7	4	2A091-001W	211010-5
6 7	6 7	8	–	211010-4
6 7	6 7	4	(1J02-106)	211010-2
6 5	2 3	4	–	211010-1

THIS DRAWING IS A CONTROLLED DOCUMENT.

DIMENSIONS: INCHES

TOLERANCES UNLESS OTHERWISE SPECIFIED:
0 PLC ± –
1 PLC ± –
2 PLC ± –
3 PLC ± .005[0.13]
4 PLC ± –
ANGLES ± –

MATERIAL: SEE CALLOUTS
FINISH: SEE CALLOUTS

DWN T. THOMPSON 19AUG98
CHK J. NORTON 19AUG98
APVD J. NORTON 19AUG98
PRODUCT SPEC —
APPLICATION SPEC —
WEIGHT 0.000000

TE Connectivity

NAME: CONNECTOR SAVER, AMPLIMITE 15 POSITION, SIZE 1, SERIES 90 –

SIZE	CAGE CODE	DRAWING NO	RESTRICTED TO
A1	00779	C-211010	—

CUSTOMER DRAWING | SCALE 4:1 | SHEET 1 OF 1 | REV AB