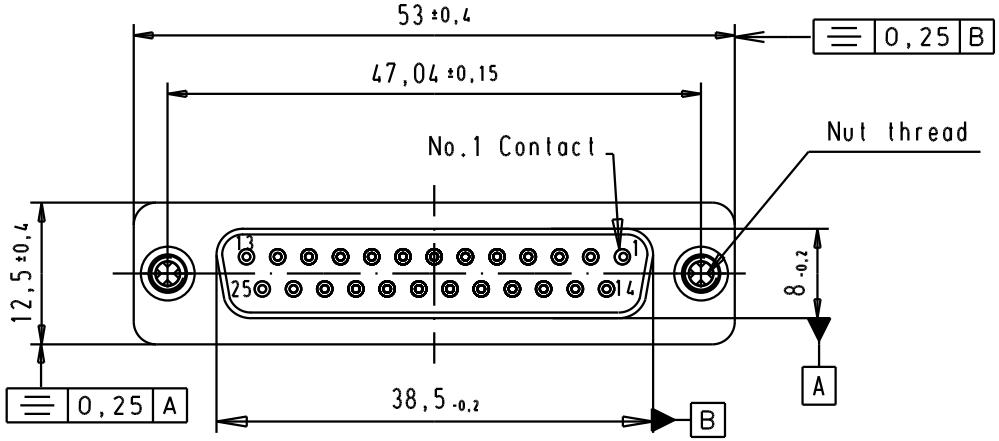

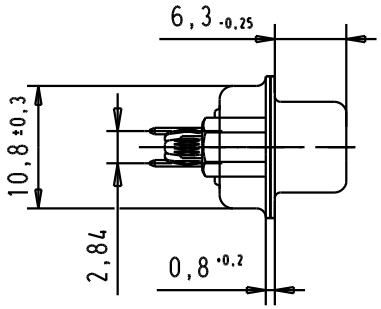

SPECIFICATION

Mating Cycles	500
Filter type	C
Capacitance	3900pf ±20%
Working Voltage	100v
Current Rating	7.5A
Insulation Resistance	>1GΩ

FREQUENCY (MHz)	ATTENUATION (dB)
5	6dB
10	11dB
50	25dB
100	35dB
500	35dB
1000	32dB

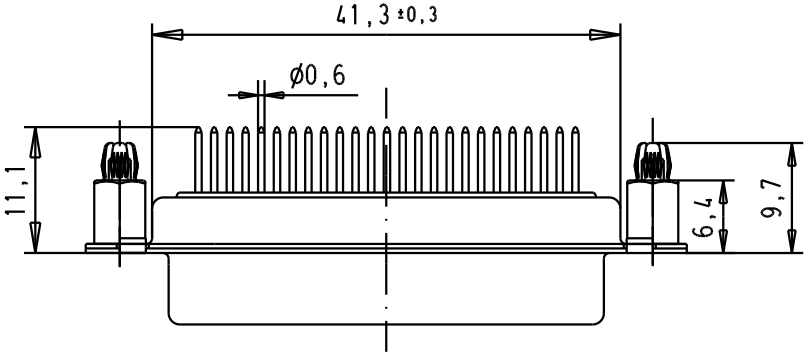

PCB Layout, Component side
PCB thickness 1.6 mm

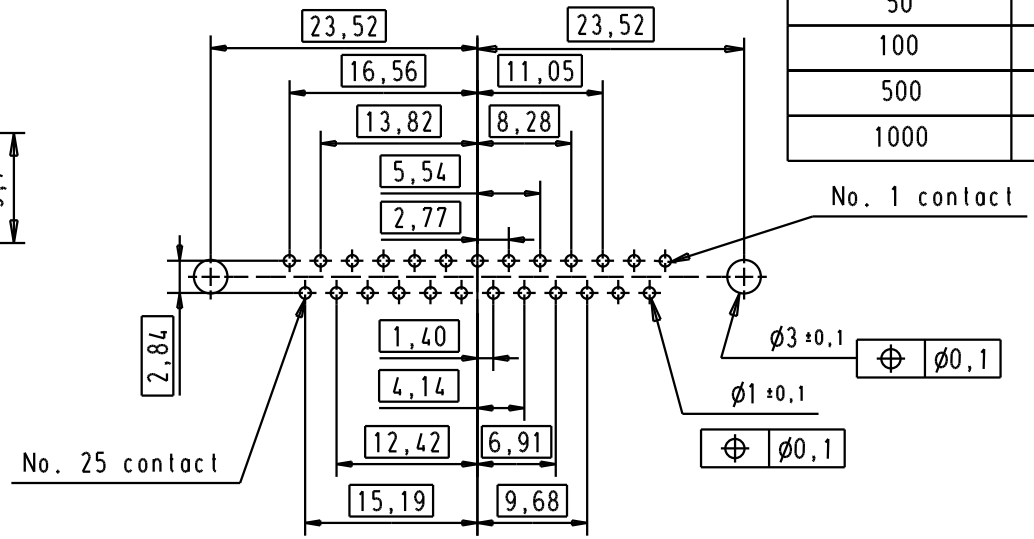

							Dat.	Name		
						Detail.	8-JUL-02	CV	All Dim. in mm Orig. Size DIN A 4	D-Sub, female, straight, 25 Poles, solder pins, tin plated shell with spacer nuts and board-locks
						Insp.				
						Stand.				
09643127246	M3		33274	30/11/05	JMDR	HARTING EURL F-95972 Paris			TB 0964312724x	
09643127245	UNC 4-40		31058	8-JUL-02	CV					
Part number	Nut thread		Mod.	Dat.	Name				Sub.	

Ma?Mstab/ Scale 1.5:1

Blatt/ Page 2/3