Alle Rechte vorbehalten/ *All rights reserved*

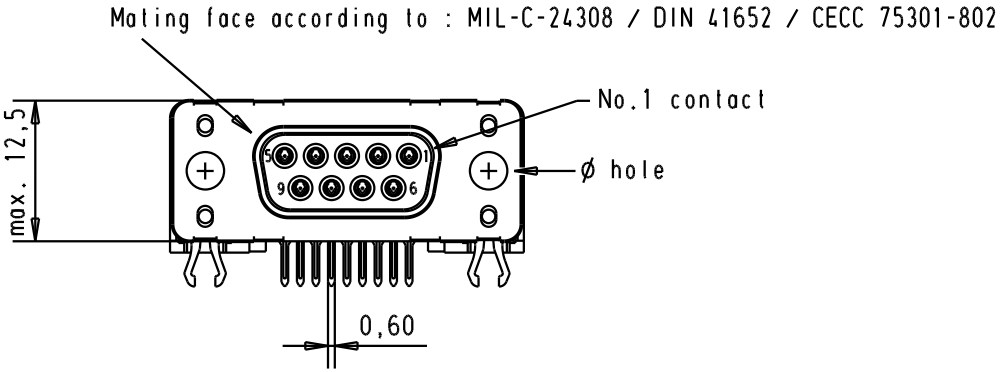

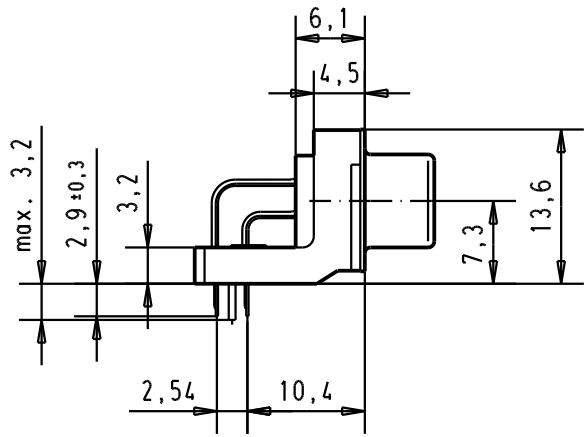

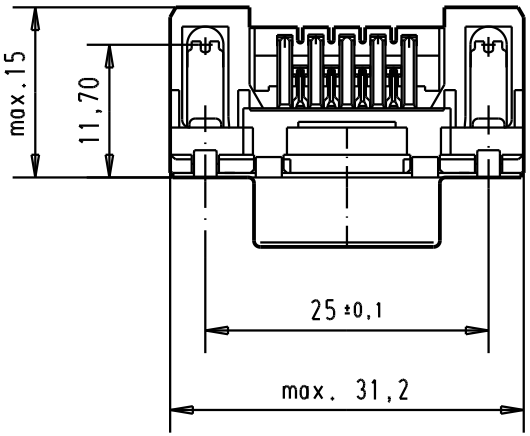

PCB layout hole
component side

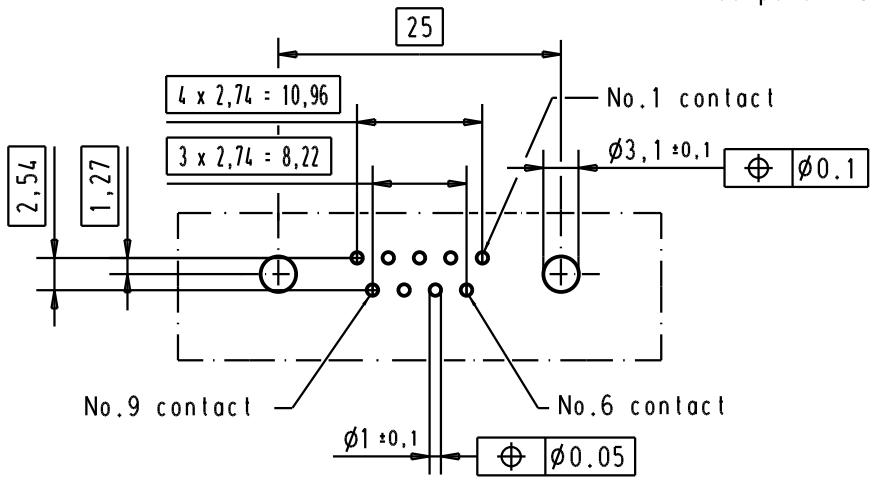

Connector retention and insertion forces on the PCB = 25 / 80 newtons

09 66 152 3610	3.1 ± 0.1	1	31892	05/05/04	JH
09 66 152 6610	3.1 ± 0.1	2	31084	04/SEP/02	YT
09 66 152 7610	3.1 ± 0.1	3	27957	20/nov/00	jfb
Part number	ø hole	Performance level	Mod.	Dat.	Name

	Dat.	Name
Detail.	20/nov/00	jfb
Insp.		
Stand.		

All Dim. in mm
Orig. Size DIN A 4

D-Sub 09 poles standard angle female, solder pin with hole and grounding board lock.

Maßstab/ *Scale* 1.5:1

HARTING EURL
F-95972 Paris

TB 0966152x61x

Sub.

Blatt/ *Page* 4/5