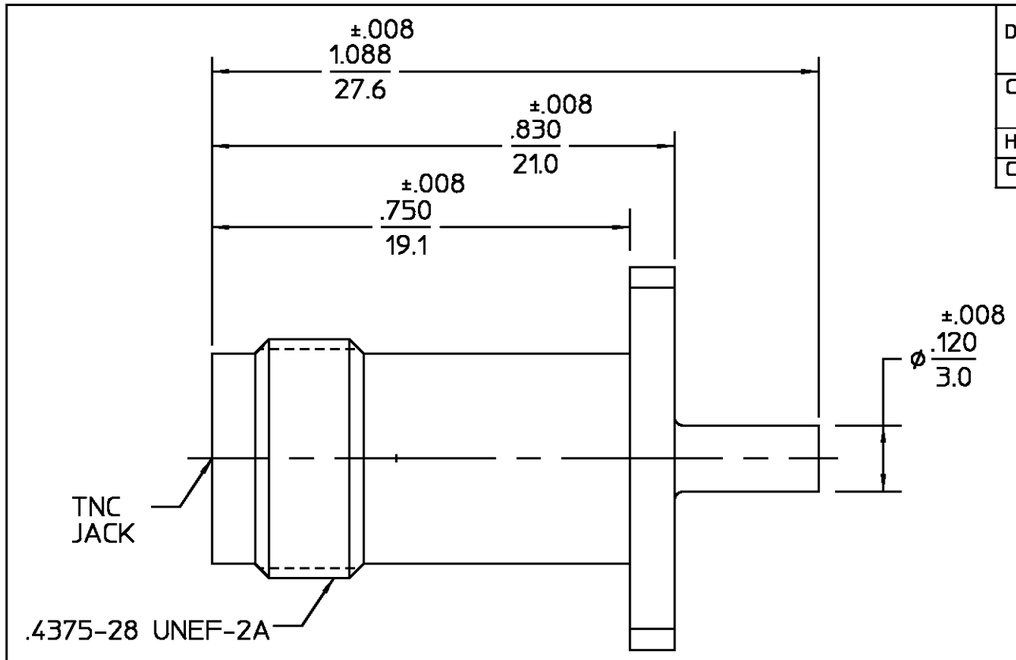

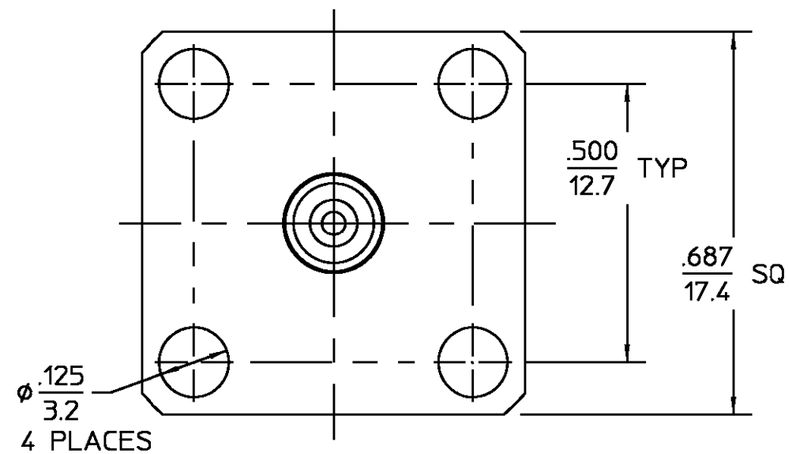

DESIGNED FOR USE WITH RG-405/U CABLE	
CABLE ENTRY DIAMETER MINIMUM	
HOUSING	.089 (2.26)
CONTACT	.023 (0.58)

REVISIONS

REV	DESCRIPTION	DATE	APPROVED
02_0	REVISED; ECN 97-0063-1	3/6/97	

NOTES:
1. CAPTURED CENTER CONTACT

ELECTRICAL	MECHANICAL	ENVIRONMENTAL
Nominal Impedance (Ohms) 50	Interface Dimensions MIL-STD-348A, Fig. 313.2	Temperature Rating -65°C to +105°C
Frequency Range (GHz) DC to 15	Recommended Mating Torque N/A	Vibration MIL-STD-202, Method 204, Condition B.
Volt Rating (VRMS MAX) @ Sea Level 335	Mating Characteristics:	Shock MIL-STD-202, Method 213, Condition I.
VSWR 1.35 MAX	Insertion (MAX Lbs) 2.0	Thermal Shock MIL-STD-202, Method 107, Condition B
Insertion Loss (dB MAX) $.06\sqrt{f(GHz)}$	Withdrawal (MIN Oz) 2.0	Exept High Temp Shall Be +115°
RF Leakage (dB MIN) -90 @ 2-3GHz	Force to Engage and Disengage (In-Lbs MAX) 2.0	Moisture Resistance MIL-STD-202, Method 106, and MIL-C-39012
Corona, 70,000 Ft (VRMS MIN) 250	Center Contact Captivation	Corrosion - MIL-STD-202, Method 101, Condition B, 5% salt spray
Dielectric Withstanding Voltage (VRMS MIN) @ Sea Level 1,000	Axial (Lbs) 6.0	
Contact Resistance (Milliohms MAX)	Radial (In-Oz) N/A	
Center Contact 1.5	Cable Retention	
Outer Contact 0.2	Axial Force (Lbs MIN) 30.0	
Cable to Housing 0.5	Torque (In-Oz) N/A 16.0	
RF High Potential @ Sea Level (VRMS MIN @ 5 MHz) 670	Weight (Grams) TBD	
I.R.(Megohms MIN) 5,000		

.XXX = in
XX.X = mm (REF)

COMPONENT	MATERIAL	FINISH
HOUSING	STAINLESS STEEL PER ASTM-A484 AND ASTM-A582, TYPE 303	GOLD PLATE PER MIL-G-45204
DIELECTRIC	TFE FLUOROCARBON PER ASTM-D-1457	N/A
CENTER CONTACT	BERYLLIUM COPPER PER ASTM-B-196 OR ASTM-B-197, ALLOY C17300, CONDITION H	GOLD PLATE PER MIL-G-45204
PIN CONTACT	BRASS PER ASTM-B-16, HALF HARD	GOLD PLATE PER MIL-G-45204

UNLESS OTHERWISE SPECIFIED DIMENSIONS ARE IN INCHES
TOLERANCE ON
FRAC. ± 1/64 DEC. ±.005 ANGLES ± 1°

DRAWN BY DATE 12/20/96
CHECKED BY
APP'D BY 3/7/97

AMP

AMP Incorporated
140 Fourth Avenue
Waltham, MA 02451-7599

These drawings and specifications are the property of M/A-COM Incorporated and shall not be reproduced or copied or used in whole or in part as the basis for the manufacture or sale of item(s) without written permission.

USE ASS'Y PROCEDURE

408-04747
NO. A.P. (31-156)

TITLE "TNC" 4 HOLE FLANGE MOUNT CABLE JACK DIRECT SOLDER

SIZE	CODE IDENT NO.		REV
B	26805	3106-5074-00	02_0
SCALE 4 : 1		SHEET 1 OF 1	

CUSTOMER DRAWING

AMP PART # 1085791-1
SHEET 1 OF 1 REV A