Product P/N	Wistron P/N	BGA Array Pattern
10129553-14430TxLF	550.00501.0011	6X25
10129553-14430MxLF	550.00501.0001	
10129553-14430WxLF	550.00501.0021	

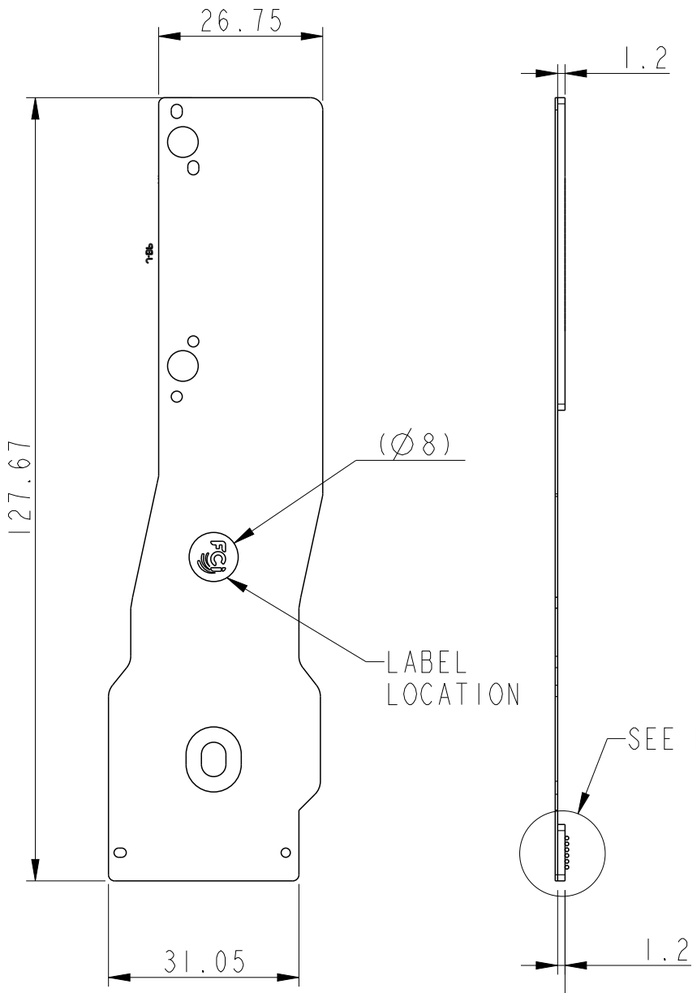

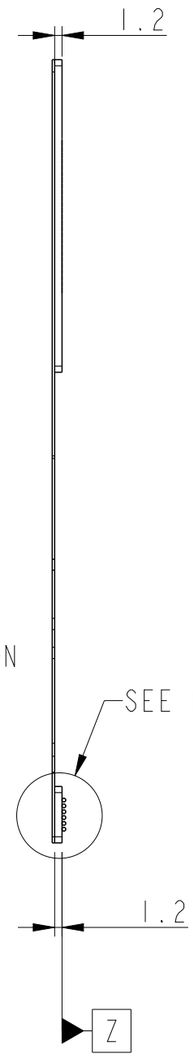

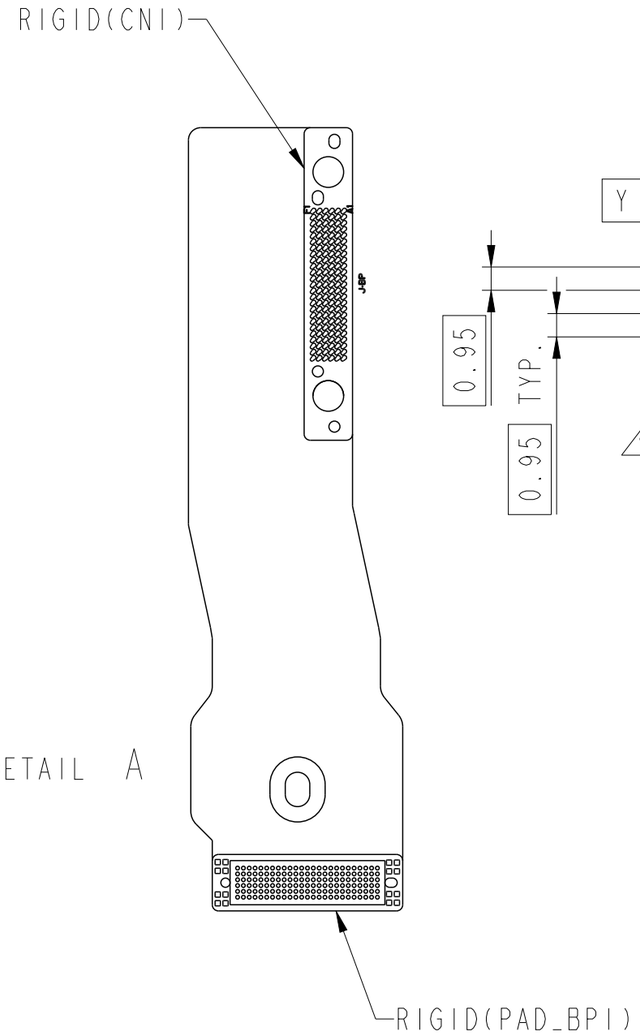

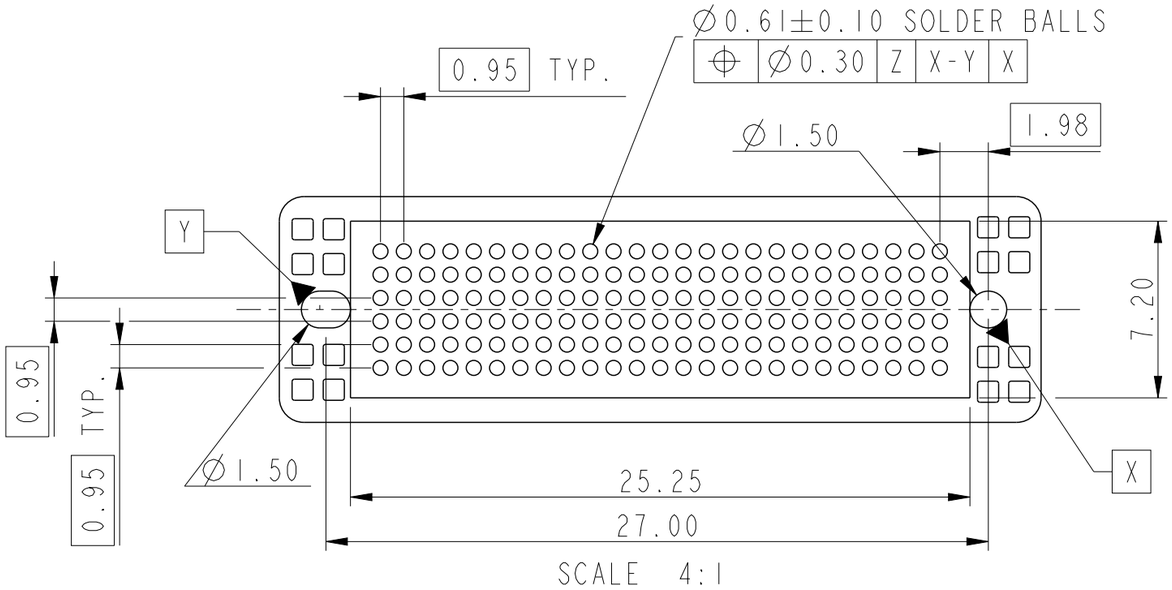

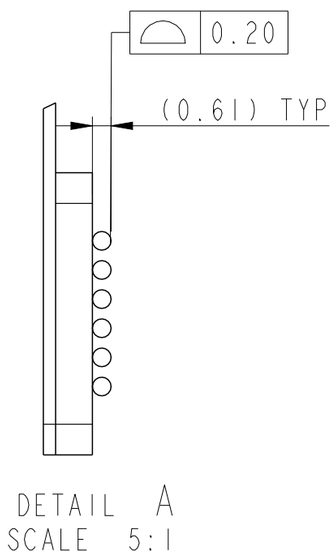

spec ref	-			dr	Zhen Luo	2016/08/18	projection	MM
tolerance std ASME Y14.5	TOLERANCES UNLESS OTHERWISE SPECIFIED			eng	Michael Song	2016/12/07		
				chr	Heaven Cen	2016/12/07		
				appr	Pei-Ming Zheng	2016/12/07	product family	-
surface ASME Y14.5	linear	0.X	±0.30	Amphenol FCi	title Flex Cable BGA Assembly Brawn		dwg no 10129553	rev B
		0.XX	±0.20					
		0.XXX	±0.10					
	angular	0°	±2°		cat. no. -		Product - Customer Drw	sheet 1 of 11

size	scale
A3	1:1
ecn no	ELX-DG-25561-1
rel level	Released

© 2016 AFCI

Creo File - REV E - 2016-02-12

Product P/N	Wistron P/N	BGA Array Pattern
10129553-14426TxLF	550.00609.0001	6X17
10129553-14426MxLF	550.00609.0011	
10129553-14426WxLF	550.00609.0021	

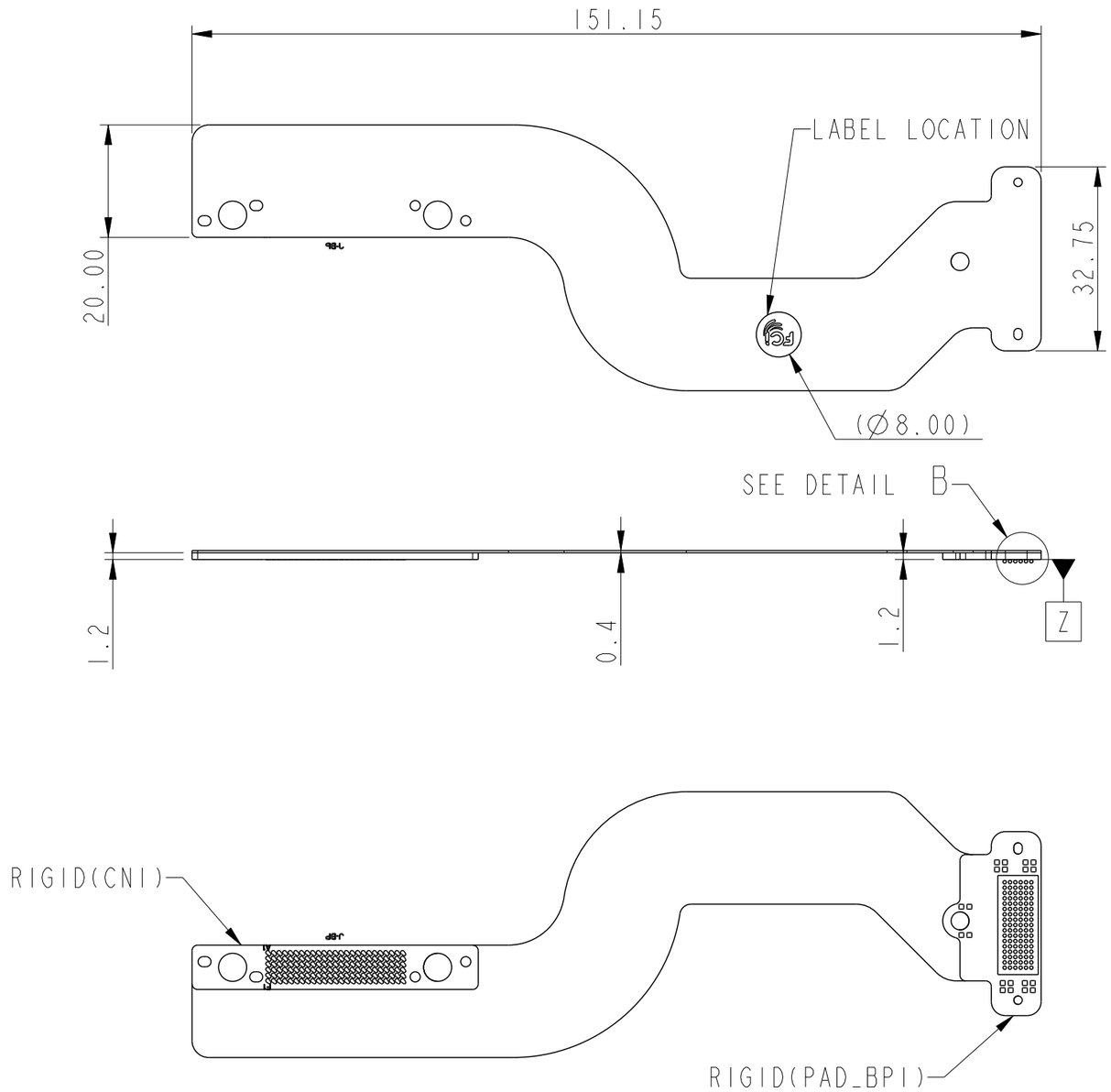

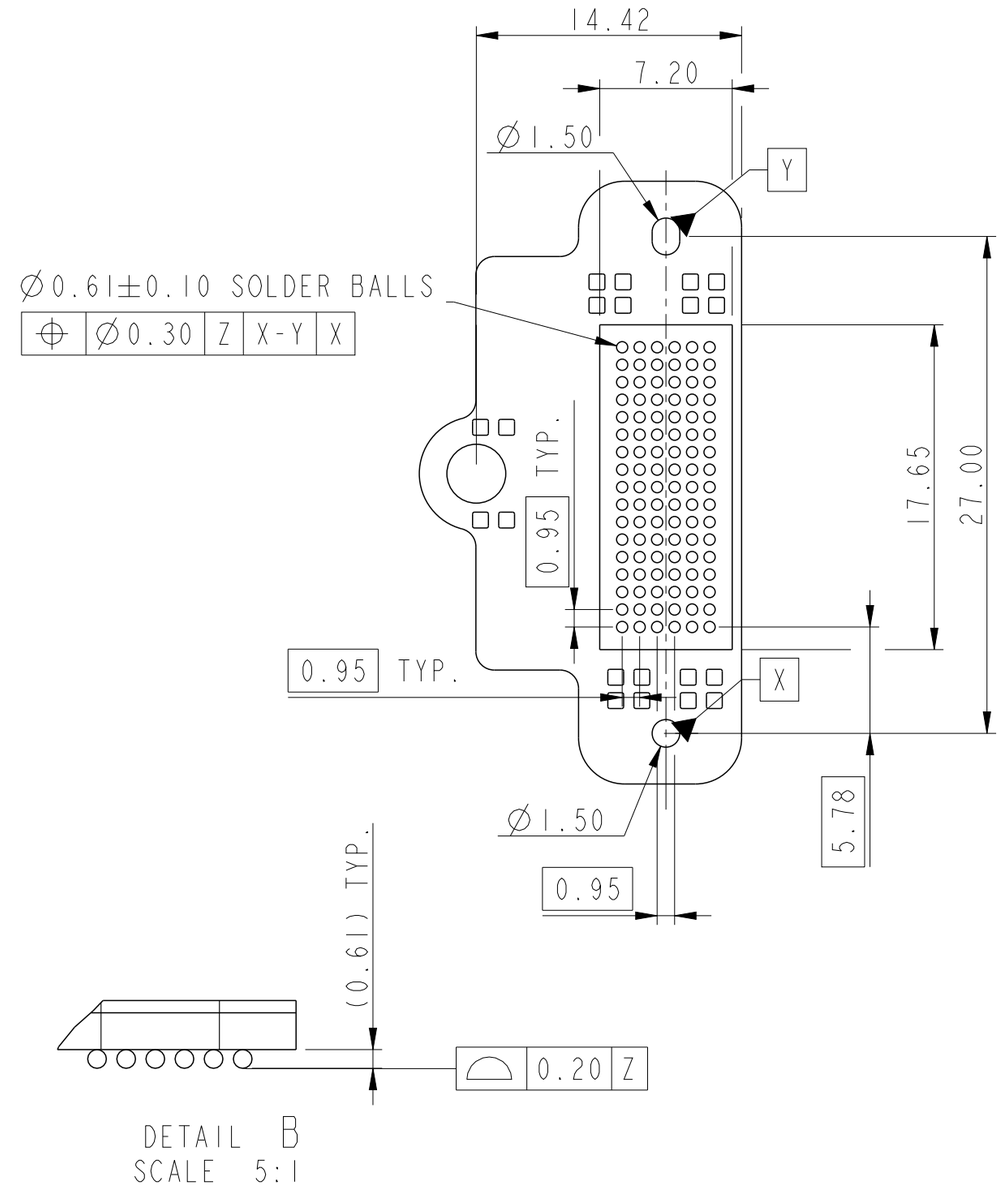

spec ref	-			dr	Zhen Luo	2016/08/18	projection	MM
tolerance std ASME Y14.5	TOLERANCES UNLESS OTHERWISE SPECIFIED			eng	Michael Song	2016/12/07		
				chr	Heaven Cen	2016/12/07		
				appr	Pei-Ming Zheng	2016/12/07	product family	-
surface ASME Y14.5	linear	0.X	±0.30	Amphenol FCi	title Flex Cable BGA Assembly Brawn		dwg no 10129553	rev B
		0.XX	±0.20					
		0.XXX	±0.10					
	angular	0°	±2°		cat. no. -	Product - Customer Drw		sheet 2 of 11

size A3 | scale 1:1 | ecn no ELX-DG-25561-1 | rel level **Released**

© 2016 AFCI

Creo File - REV E - 2016-02-12

Product P/N	Wistron P/N	BGA Array Pattern
10129553-14425TxLF	550.0060A.0001	6X14
10129553-14425MxLF	550.0060A.0011	
10129553-14425WxLF	550.0060A.0021	

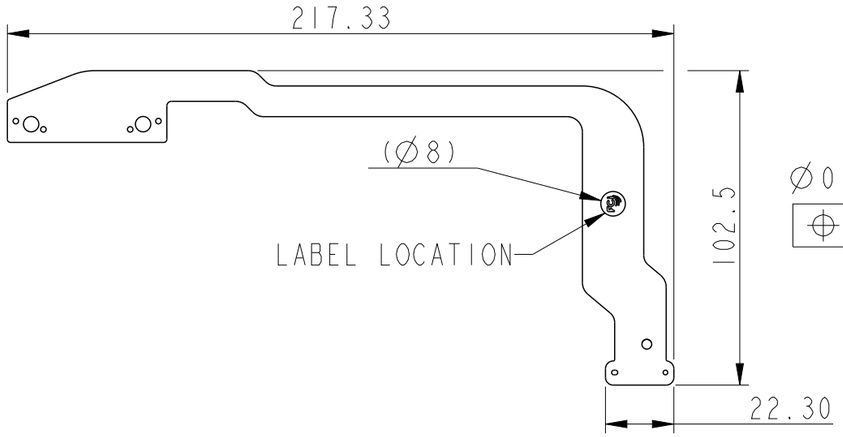

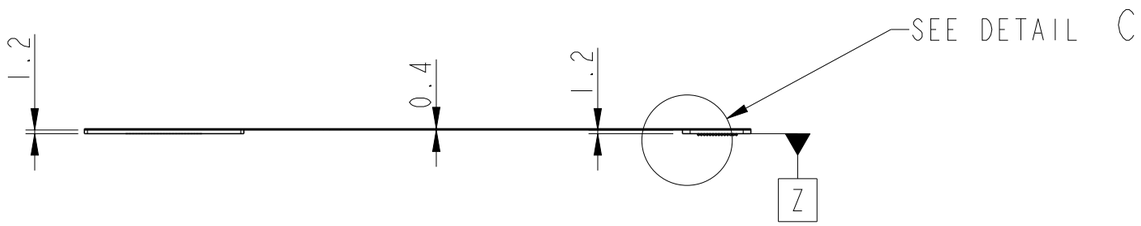

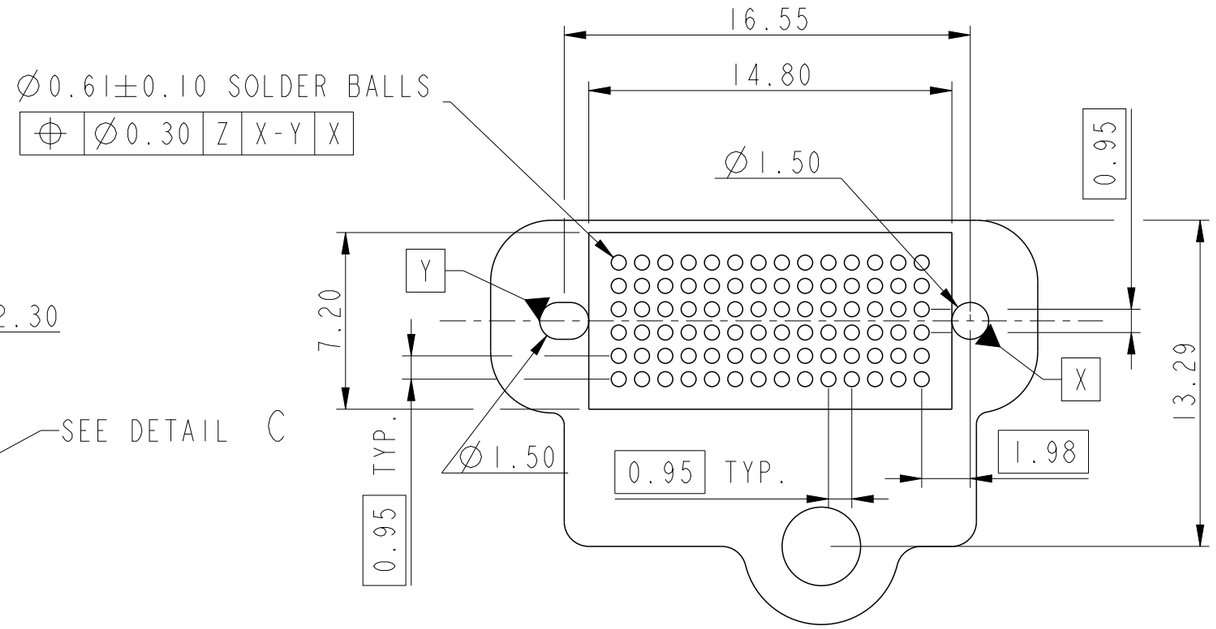

SCALE 4:1

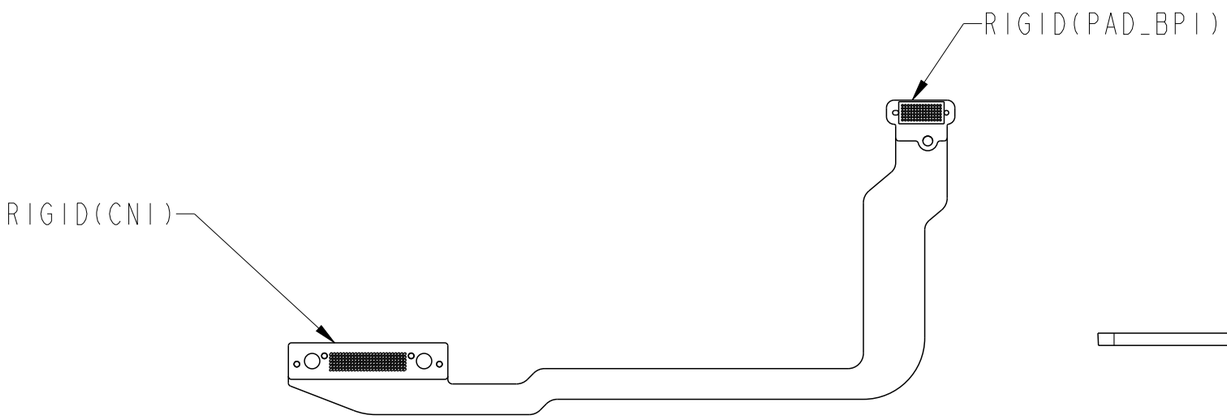

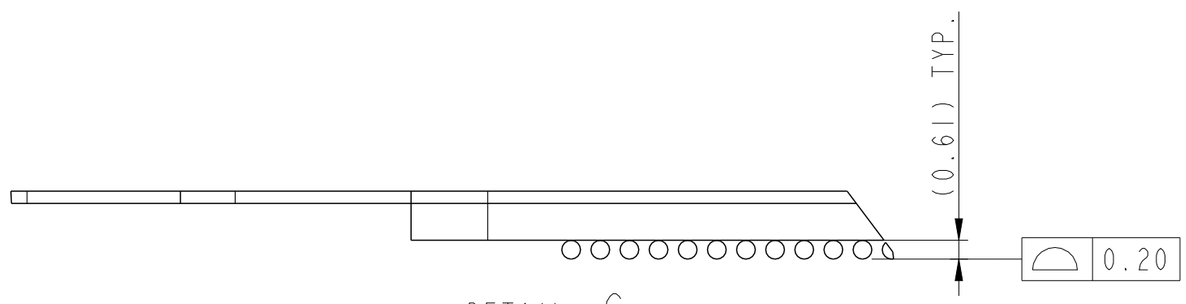

DETAIL C
SCALE 5:1

spec ref	-			dr	Zhen Luo	2016/08/18	projection	MM
tolerance std ASME Y14.5	TOLERANCES UNLESS OTHERWISE SPECIFIED			eng	Michael Song	2016/12/07		
				chr	Heaven Cen	2016/12/07		
				appr	Pei-Ming Zheng	2016/12/07	product family	-
surface ASME Y14.5	linear	0.X	±0.30	title	Flex Cable BGA Assembly		dwg no	10129553
		0.XX	±0.20		Brawn			
		0.XXX	±0.10					
	angular	0°	±2°	cat. no.	-	Product - Customer Drw		

size	A3
scale	1:2
ecn no	ELX-DG-25561-1
rel level	Released
rev	B
sheet 3 of 11	

Amphenol FCi

© 2016 AFCI

Creo File - REV E - 2016-02-12

Product P/N	Wistron P/N	BGA Array Pattern
10129553-14423TxLF	550.0060C.0001	6X17,6X24
10129553-14423MxLF	550.0060C.0011	
10129553-14423WxLF	550.0060C.0021	

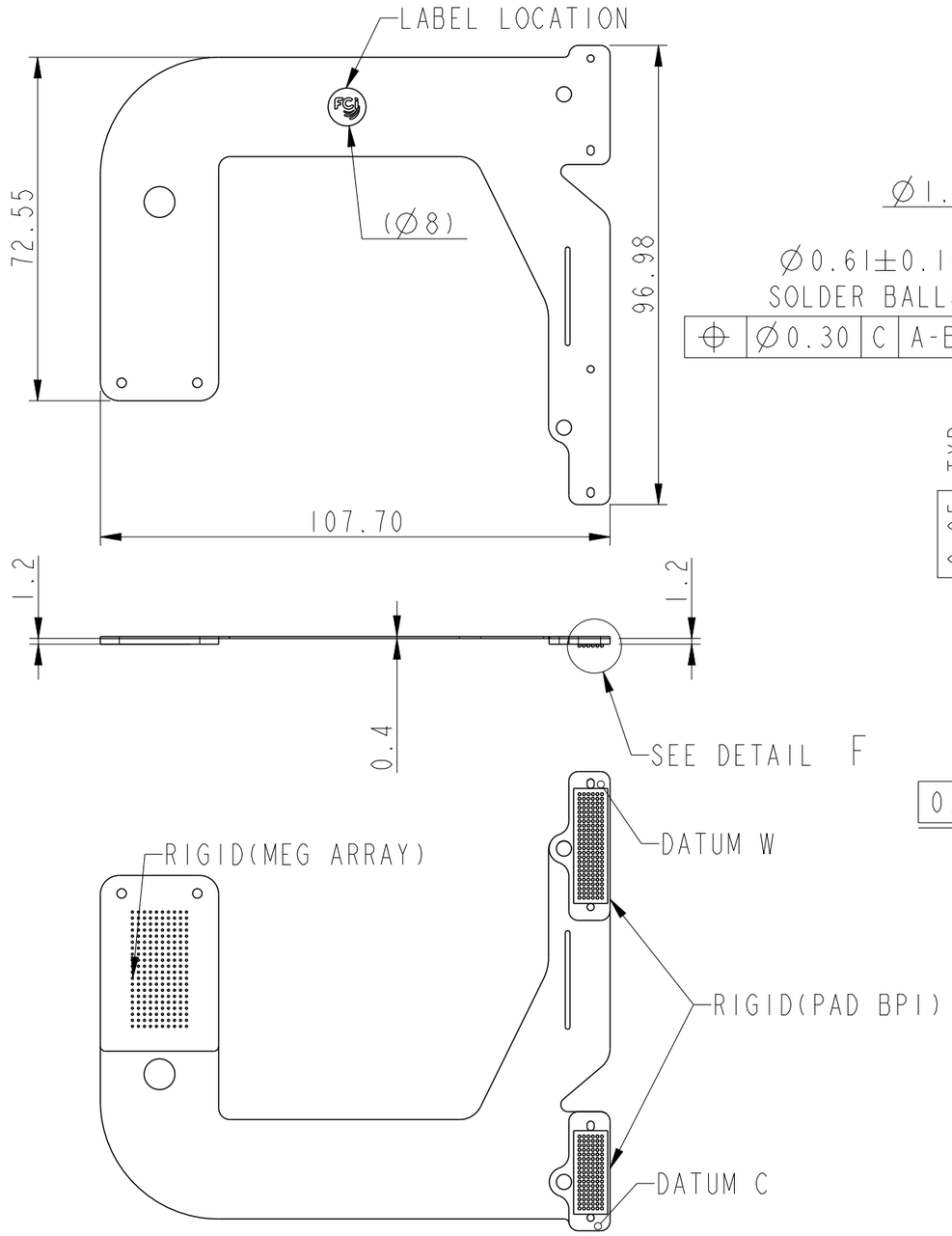

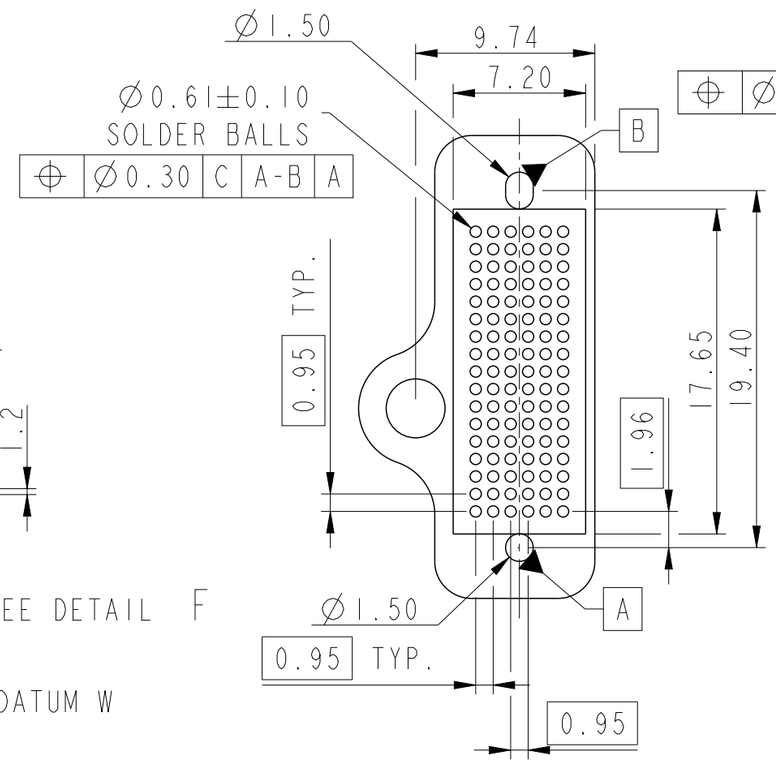

SCALE 3:1

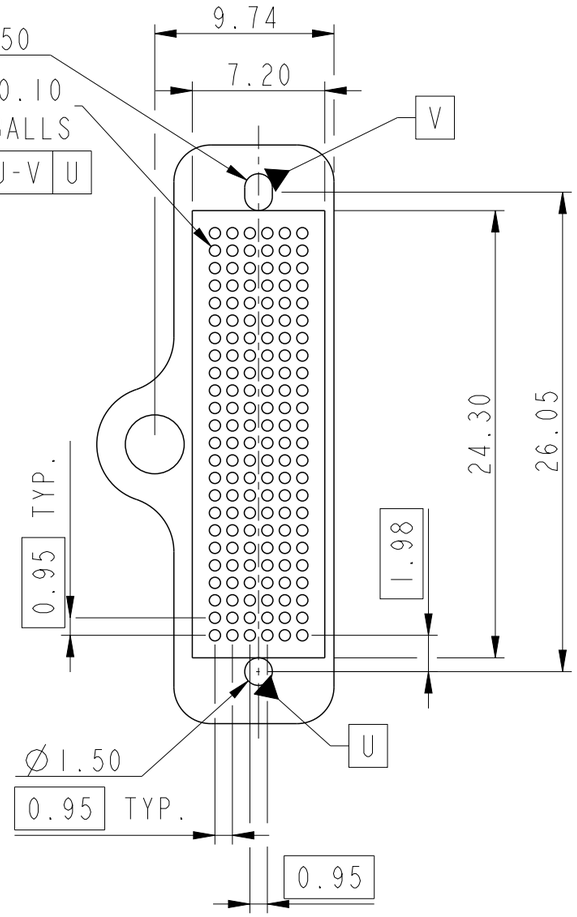

SCALE 3:1

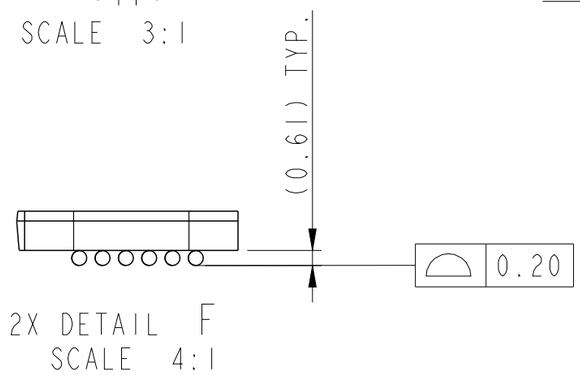

2X DETAIL F
SCALE 4:1

spec ref	-	dr	Zhen Luo	2016/08/18	projection	MM	size A3 / scale 4:5
tolerance std ASME Y14.5	TOLERANCES UNLESS OTHERWISE SPECIFIED	eng	Michael Song	2016/12/07			ecn no ELX-DG-25561-1
		chr	Heaven Cen	2016/12/07			
		appr	Pei-Ming Zheng	2016/12/07	product family -		rel level **Released**
surface ASME Y14.5	linear 0.X ±0.30; 0.XX ±0.20; 0.XXX ±0.10; angular 0° ±2°	Amphenol FCi	title Flex Cable BGA Assembly Brawn		dwg no 10129553		rev B
			cat. no. -		Product - Customer Drw		sheet 4 of 11

© 2016 AFCI

Creo File - REV E - 2016-02-12

Product P/N	Wistron P/N	BGA Array Pattern
10129553-14424TxLF	550.0060B.0001	6X25
10129553-14424MxLF	550.0060B.0011	
10129553-14424WxLF	550.0060B.0021	

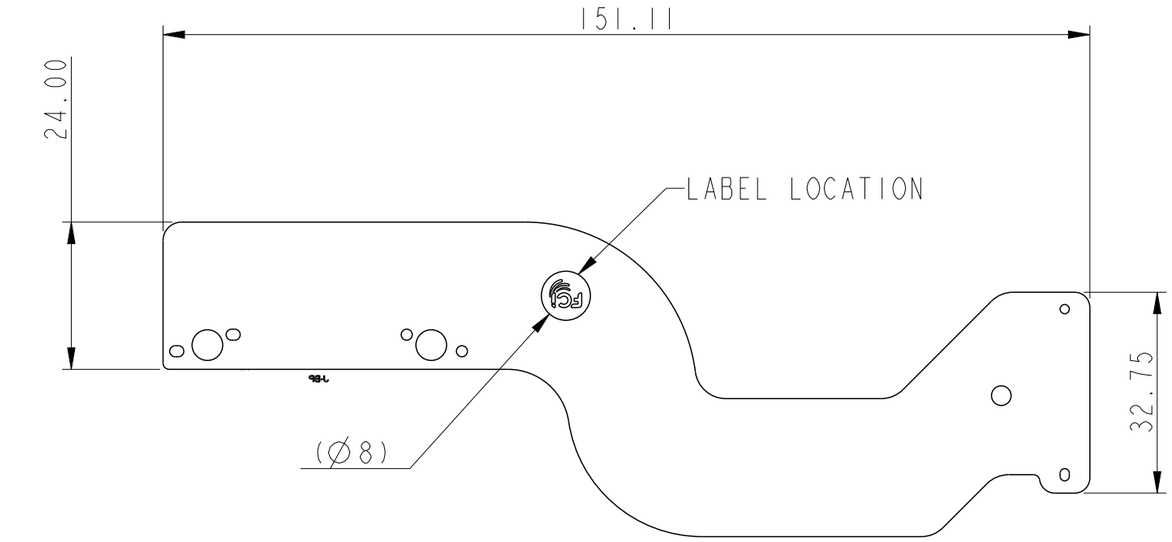

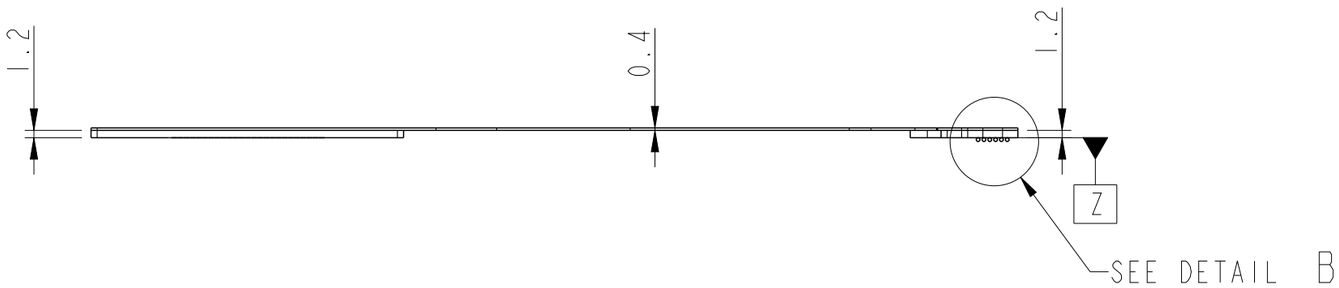

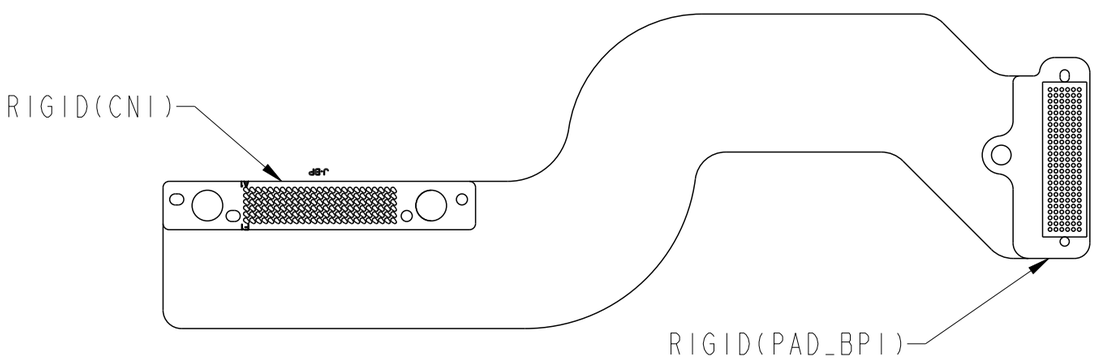

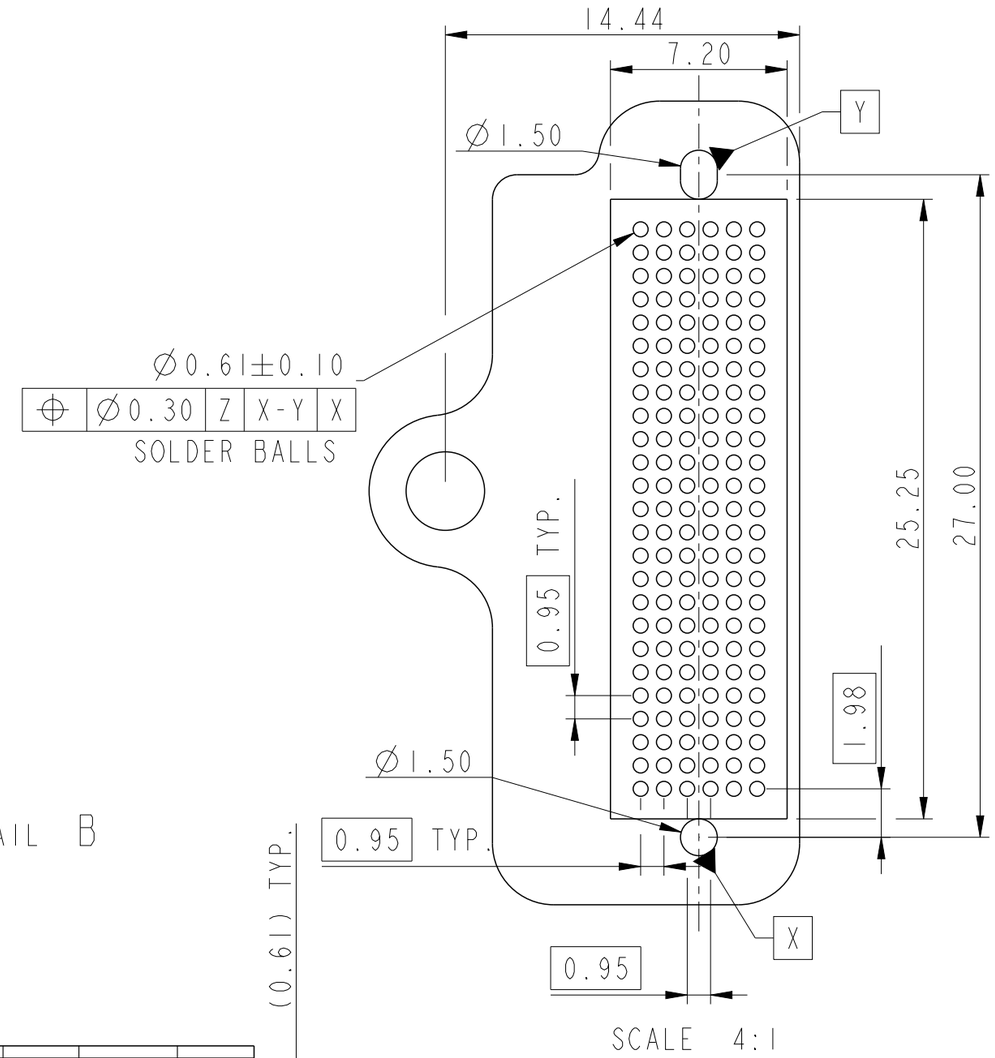

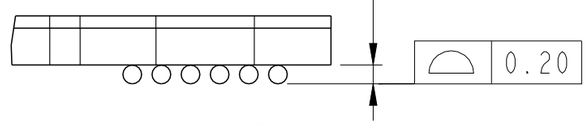

DETAIL B
SCALE 5:1

spec ref	-			dr	Zhen Luo	2016/08/18	projection	MM	size A3	scale 1:1
tolerance std ASME Y14.5	TOLERANCES UNLESS OTHERWISE SPECIFIED			eng	Michael Song	2016/12/07			ecn no	ELX-DG-25561-1
				chr	Heaven Cen	2016/12/07				
				appr	Pei-Ming Zheng	2016/12/07	product family	-	rel level	Released
surface ASME Y14.5	linear	0.X	±0.30	Amphenol FCi	title Flex Cable BGA Assembly Brawn		dwg no 10129553		rev B
		0.XX	±0.20						
		0.XXX	±0.10						
	angular	0°	±2°		cat. no. -		Product - Customer Drw		sheet 5 of 11

© 2016 AFCI

Creo File - REV E - 2016-02-12

PDS: Rev :B STATUS:Released Printed: Dec 07, 2016

Product P/N	Wistron P/N	BGA Array Pattern
10129553-14428TxLF	550.00504.0011	6X24,6X17
10129553-14428MxLF	550.00504.0001	
10129553-14428WxLF	550.00504.0021	

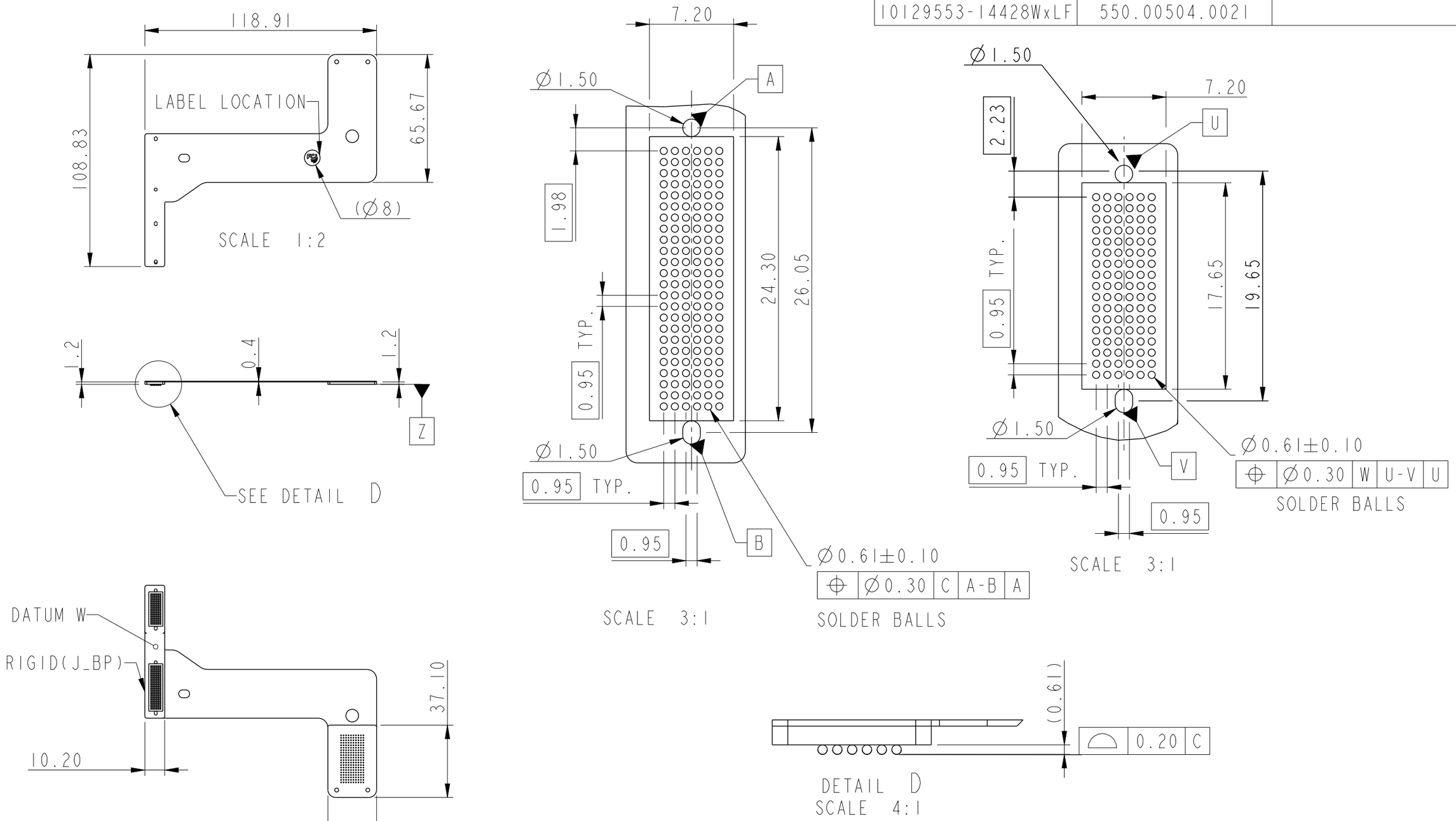

spec ref	-	dr	Zhen Luo	2016/08/18	projection	MM	size A3 / scale 1:1
tolerance std ASME Y14.5	TOLERANCES UNLESS OTHERWISE SPECIFIED	eng	Michael Song	2016/12/07			
		chr	Heaven Cen	2016/12/07			ecn no ELX-DG-25561-1
		appr	Pei-Ming Zheng	2016/12/07	product family	-	rel level Released
surface ASME Y14.5	linear 0.X ±0.30; 0.XX ±0.20; 0.XXX ±0.10; angular 0° ±2°	Amphenol FCi	title Flex Cable BGA Assembly Brawn		dwg no 10129553		rev B
			cat. no. -		Product - Customer Drw		sheet 6 of 11

© 2016 AFCI

Creo File - REV E - 2016-02-12

Product P/N	Wistron P/N	BGA Array Pattern
10129553-14429TxLF	550.00503.0031	6X25
10129553-14429MxLF	550.00503.0001	
10129553-14429WxLF	550.00503.0021	

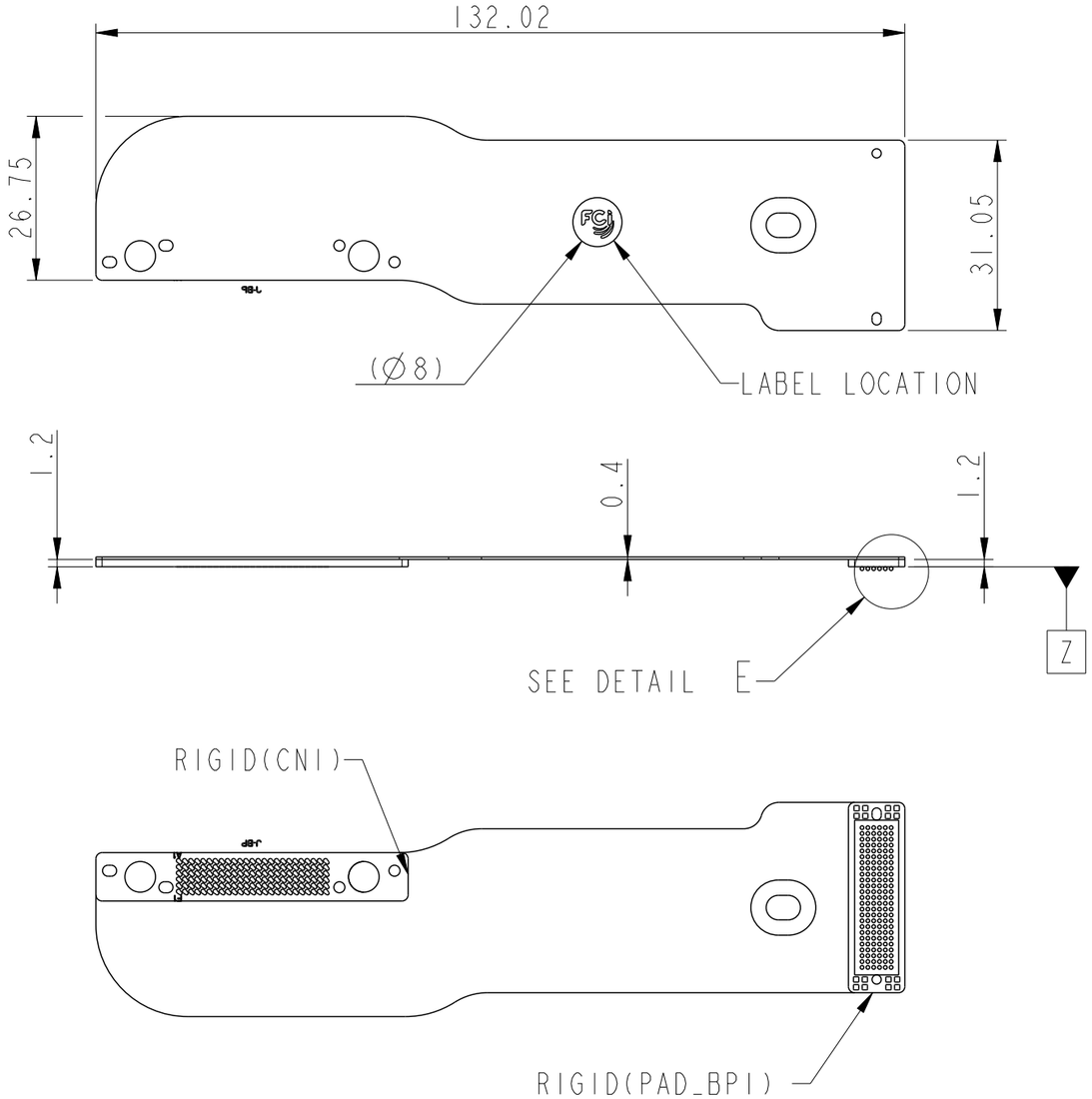

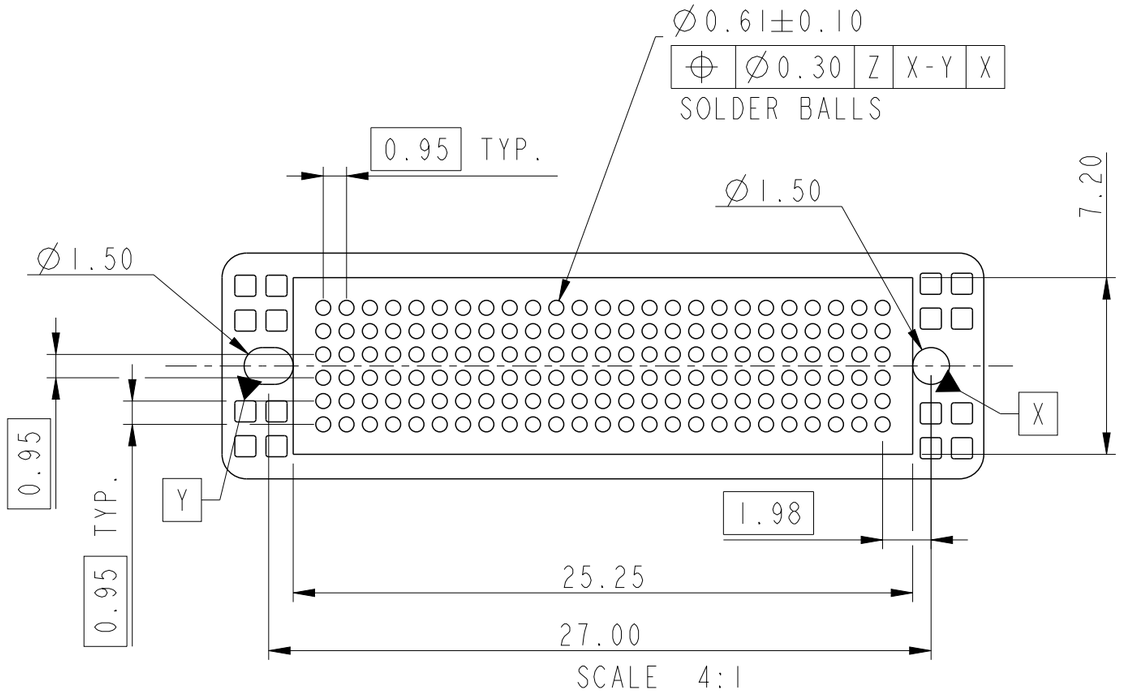

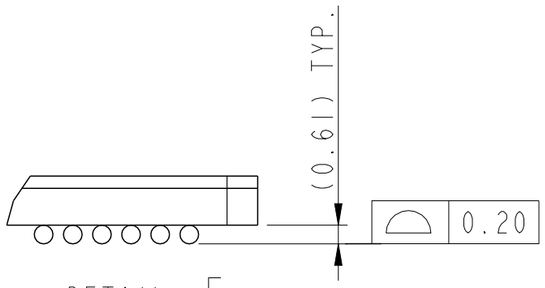

DETAIL E
SCALE 5:1

spec ref	-			dr	Zhen Luo	2016/08/18	projection	MM
tolerance std ASME Y14.5	TOLERANCES UNLESS OTHERWISE SPECIFIED			eng	Michael Song	2016/12/07		
				chr	Heaven Cen	2016/12/07		
				appr	Pei-Ming Zheng	2016/12/07	product family	-
surface ASME Y14.5	linear	0.X	±0.30	title	Flex Cable BGA Assembly Brawn		dwg no	10129553
		0.XX	±0.20					
		0.XXX	±0.10					
	angular	0°	±2°	cat. no.	-	Product - Customer Drw		

size	scale
A3	1:1
ecn no	ELX-DG-25561-1
rel level	Released
rev	B
sheet 7 of 11	

Amphenol FCi

© 2016 AFCI

Creo File - REV E - 2016-02-12

Product P/N	Wistron P/N	BGA Array Pattern
10129553-14460TxLF	550.0060D.0001	6X14
10129553-14460MxLF	550.0060D.0011	
10129553-14460WxLF	550.0060D.0021	

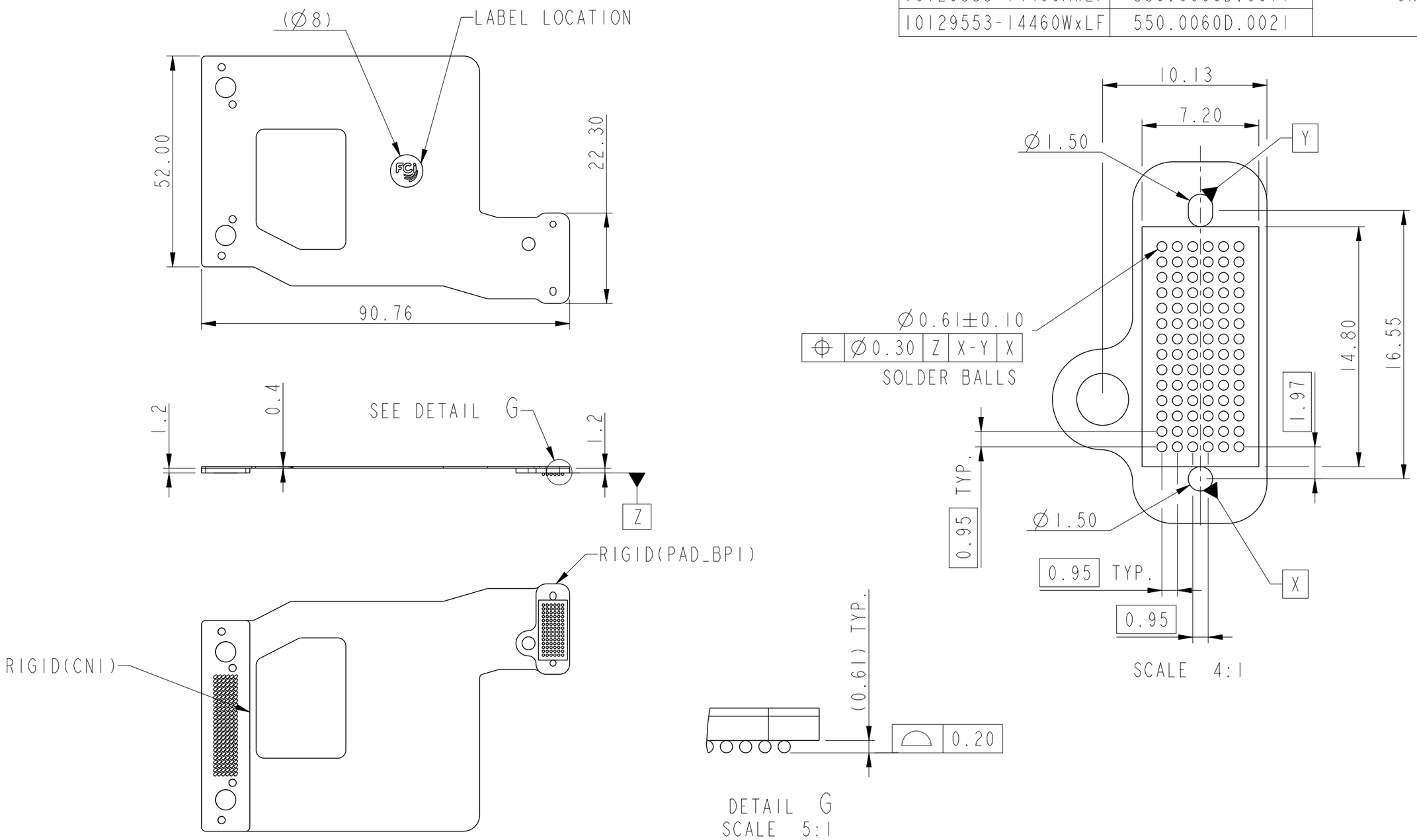

spec ref	-			dr	Zhen Luo	2016/08/18	
tolerance std ASME Y14.5	TOLERANCES UNLESS OTHERWISE SPECIFIED			eng	Michael Song	2016/12/07	
				chr	Heaven Cen	2016/12/07	
				appr	Pei-Ming Zheng	2016/12/07	
surface ✓ ASME Y14.5	linear	0.X	±0.30				
		0.XX	±0.20				
		0.XXX	±0.10				
	angular	0°	±2°				

projection | MM | size A3 | scale 1:1
ecn no ELX-DG-25561-1
product family - | rel level **Released**

Amphenol FCi

title: Flex Cable BGA Assembly
Brawn

dwg no 10129553 | rev **B**

cat. no. - | Product - Customer Drw | sheet 8 of 11

© 2016 AFCI

Creo File - REV E - 2016-02-12

Product P/N	Wistron P/N	BGA Array Pattern
10129553-14461TxLF	550.00505.0011	6X14
10129553-14461MxLF	550.00502.0001	
10129553-14461WxLF	550.00505.0021	

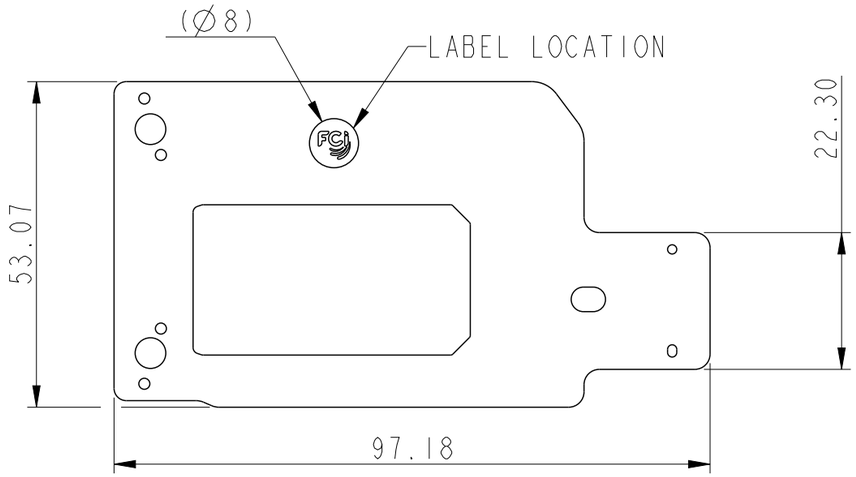

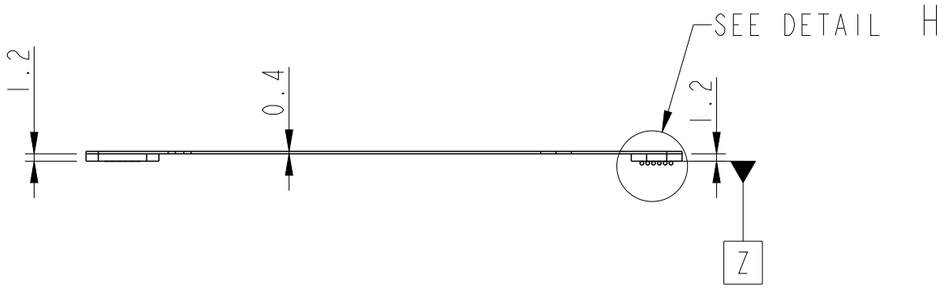

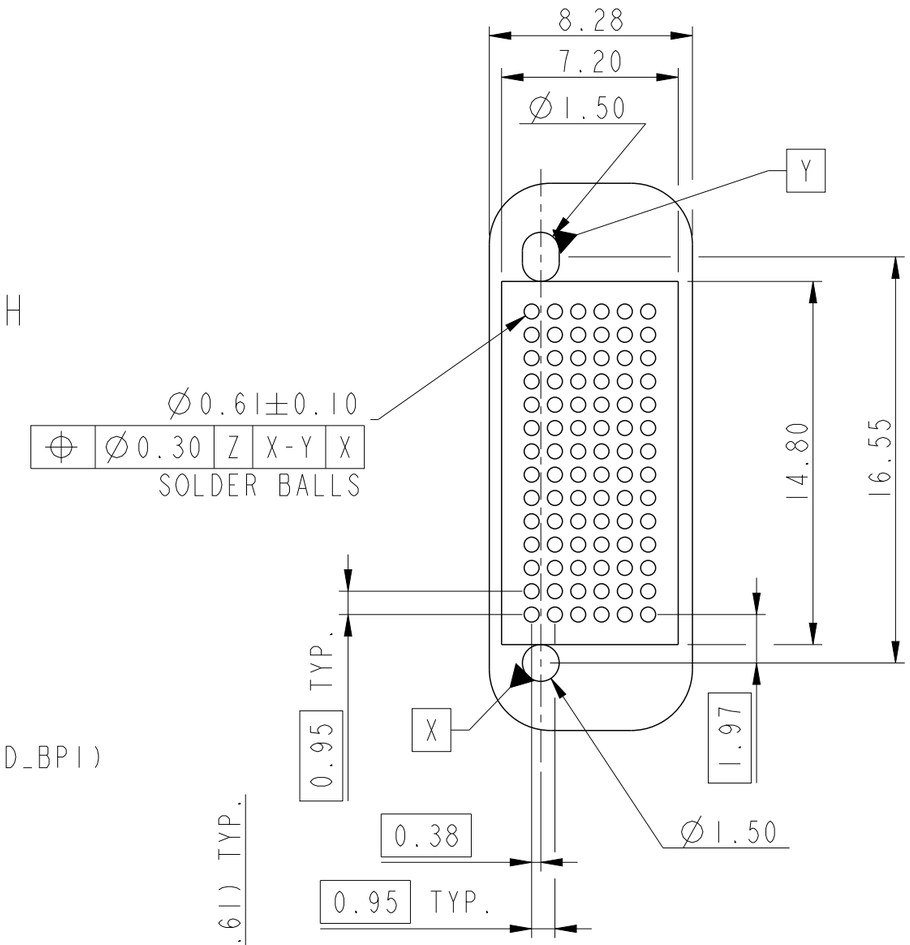

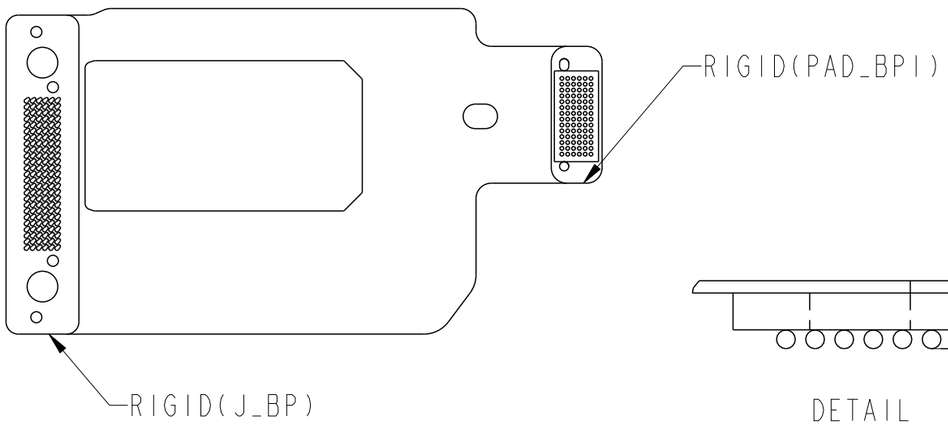

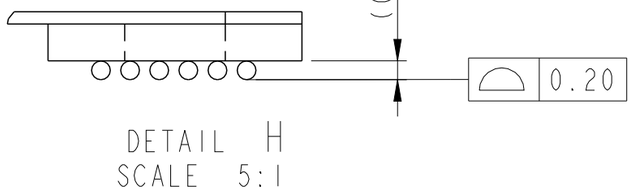

spec ref	-			dr	Zhen Luo	2016/08/18	projection	MM	size A3 / scale 1:1
tolerance std ASME Y14.5	TOLERANCES UNLESS OTHERWISE SPECIFIED			eng	Michael Song	2016/12/07			ecn no ELX-DG-25561-1
				chr	Heaven Cen	2016/12/07			
				appr	Pei-Ming Zheng	2016/12/07	product family -		rel level **Released**
surface ✓	linear	0.X	±0.30	Amphenol FCi	title Flex Cable BGA Assembly		dwg no 10129553		rev B
		0.XX	±0.20		Brawn				
		0.XXX	±0.10						
ASME Y14.5	angular	0°	±2°		cat. no. -		Product - Customer Drw		sheet 9 of 11

© 2016 AFCI

Creo File - REV E - 2016-02-12

Product P/N	Wistron P/N	BGA Array Pattern
10129553-14531TxLF	550.00507.0011	6X25
10129553-14531MxLF	550.00507.0001	
10129553-14531WxLF	550.00507.0021	

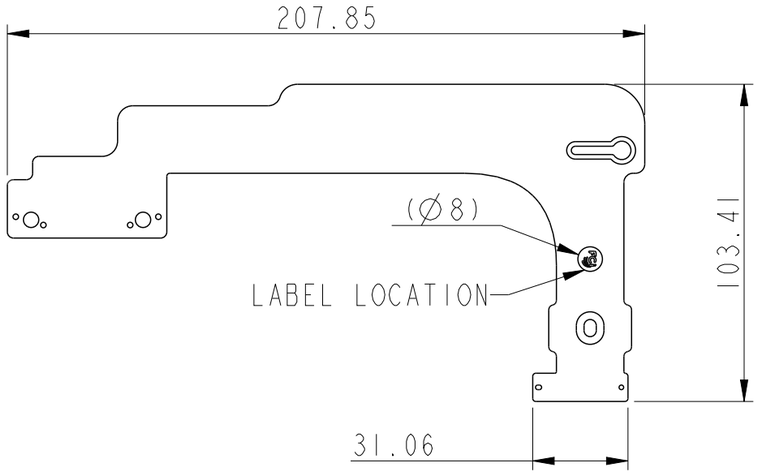

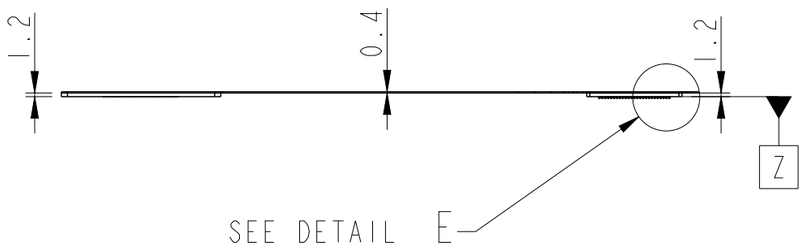

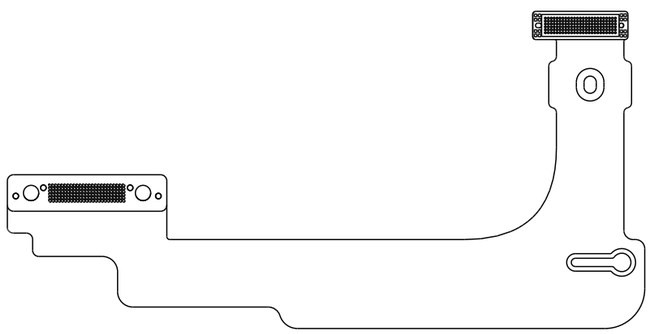

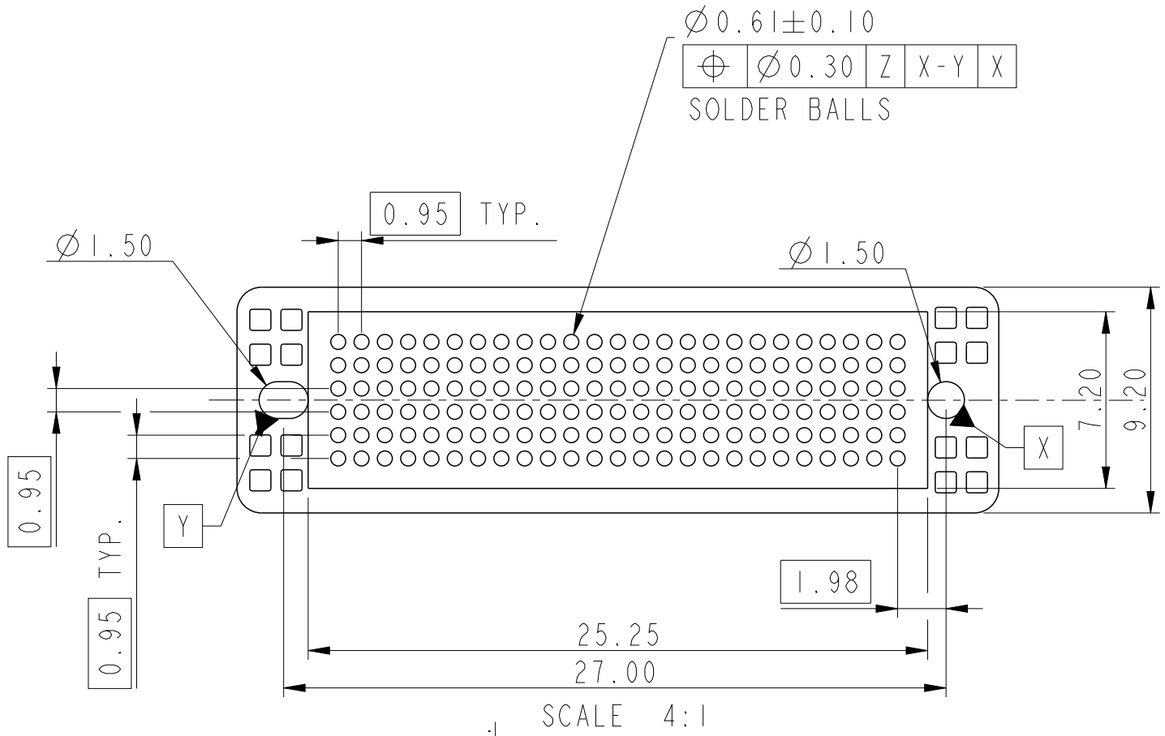

SCALE 4:1

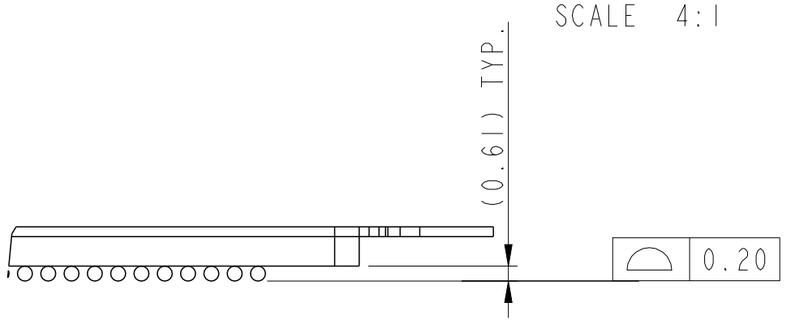

DETAIL E
SCALE 4:1

spec ref -			dr	Zhen Luo	2016/08/18	projection	MM	size A3 / scale 1:2
tolerance std ASME Y14.5	TOLERANCES UNLESS OTHERWISE SPECIFIED		eng	Michael Song	2016/12/07			
			chr	Heaven Cen	2016/12/07			ecn no ELX-DG-25561-1
			appr	Pei-Ming Zheng	2016/12/07	product family -		rel level Released
surface ✓	linear	0.X	±0.30	Amphenol FCi	title Flex Cable BGA Assembly Brawn		dwg no 10129553	rev B
		0.XX	±0.20					
		0.XXX	±0.10					
ASME Y14.5	angular	0°	±2°		cat. no. -	Product - Customer Drw		sheet 10 of 11

© 2016 AFCI

Creo File - REV E - 2016-02-12

PRODUCT PART NUMBER

10129553-□□□□□XXLF

BASE NUMBER

LEAD FREE

PCB DESIGN:
0: STANDARD
1 TO N: NEW STACKUP

SUPPLIER:
M:Multex
T:TTM
W:WuZhu

CODE (SEE TABLE)

CODE	Flex Cable code In Wistron
14430	14430
14426	14426
14425	14425
14423	14423
14424	14424
14428	14428
14429	14429
14460	14460
14461	14461
14531	14531

NOTES:

1. MATERIAL:
   FLEX CABLE
   SOLDER BALL: LEAD FREE 96.5Sn/3Ag/0.5Cu
   VENDOR: ALPHA
2. SOLDER BALLS WILL NOT BE PERFECT SHPERICAL SHAPE DUE TO REFLOW ATTACHMENT.
3. PRODUCT SPECIFICATION: GS-12-1183.
4. APPLICATION SPECIFICATION: GS-20-0391.
5. PACKAGE SPECIFICATION: GS-14-2365.
6. PRODUCT MEET EUROPEAN UNION DIRECTIVES AND OTHER COUNTRY REGULATIONS DESCRIBED IN GS-22-08.
7. RATED VOLTAGE L80V-LESS THAN 80V
8. SHEAR FORCE OF SOLDER BALL:800GF MIN.
9. APPEARANCE STANDARD FOLLOWS IPC 6013 CLASS2 CRITERIA AND DELL PCB 10207.
10. MSL LEVEL:MULTEK:5 TTM:5A.
11. CONTACT RESISTANCE:
    MULTEK:10 OHM TTM:10 OHM
12. INSULATION RESISTANCE:
    MULTEK:10 MEGAOHM TTM:10 MEGAOHM
13. PCB WARPAGE CRITERIA:
    0.7% OF PCB LENGTH MAX.(BEFORE REFLOW)
14. IMPEDANCE REQUIREMENT.

100 +/-10 OHMS RISE TIME=70PS (20% TO 80%)	85 +/-10 OHMS RISE TIME=70PS (20% TO 80%)	50 +/-5 OHMS RISE TIME=100PS (10% TO 90%)
SAS AND PCIE PAD (DIFFERENTIAL PAIR)	SATA PAD (DIFFERENTIAL PAIR)	SIDE BAND PAD (POWER,GND,SIDE BAND SIGNALS)

15. DIMENSION WITH THE "( )" SYMBOL IS THE REFERENCE DIMENSION.

spec ref	-	dr	Zhen Luo	2016/08/18	projection
tolerance std ASME Y14.5	TOLERANCES UNLESS OTHERWISE SPECIFIED	eng	Michael Song	2016/12/07	MM
		chr	Heaven Cen	2016/12/07	
		appr	Pei-Ming Zheng	2016/12/07	product family -

size	A3	scale	1:1
ecn no	ELX-DG-25561-1		
rel level	Released		

surface ASME Y14.5	linear	0.X	±0.30
		0.XX	±0.20
		0.XXX	±0.10
	angular	0°	±2°

Amphenol FCi

title: Flex Cable BGA Assembly
Brawn

dwg no: 10129553

rev: B

cat. no. - | Product - Customer Drw | sheet 11 of 11

© 2016 AFCI