MICRO SWITCH
FED. MFR. CODE 91929

SWITCH-ENCLOSED

CATALOG LISTING
151ML1

THIS DRAWING COVERS A PROPRIETARY ITEM AND IS THE PROPERTY OF MICRO SWITCH A DIVISION OF HONEYWELL THIS DRAWING IS NOT TO BE COPIED OR USED WITHOUT THE APPROVAL OF MICRO SWITCH

M

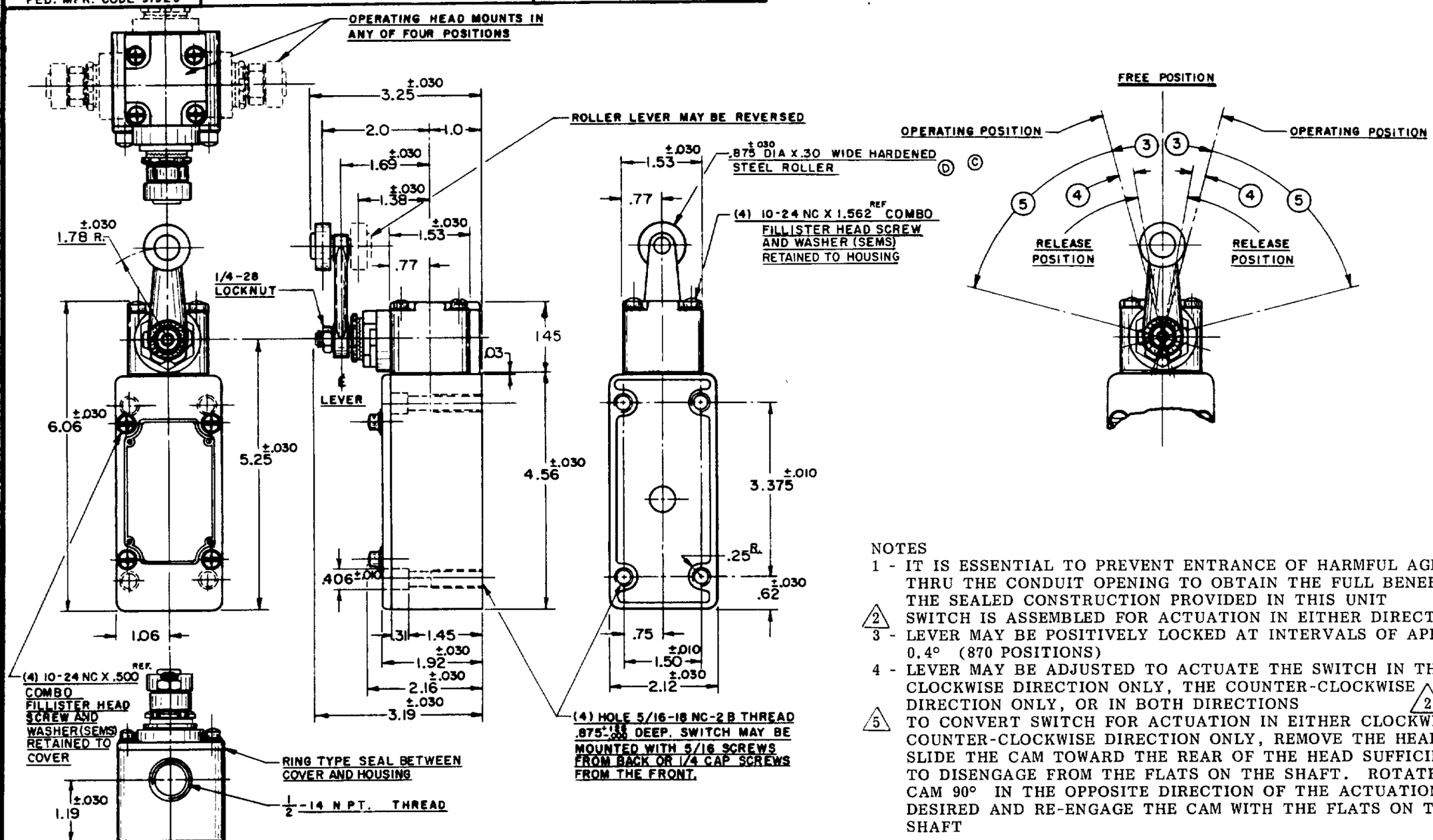

NOTES

1 - IT IS ESSENTIAL TO PREVENT ENTRANCE OF HARMFUL AGENTS THRU THE CONDUIT OPENING TO OBTAIN THE FULL BENEFIT OF THE SEALED CONSTRUCTION PROVIDED IN THIS UNIT

2 SWITCH IS ASSEMBLED FOR ACTUATION IN EITHER DIRECTION

3 - LEVER MAY BE POSITIVELY LOCKED AT INTERVALS OF APPROX 0.4° (870 POSITIONS)

4 - LEVER MAY BE ADJUSTED TO ACTUATE THE SWITCH IN THE CLOCKWISE DIRECTION ONLY, THE COUNTER-CLOCKWISE DIRECTION ONLY, OR IN BOTH DIRECTIONS 2 5

5 TO CONVERT SWITCH FOR ACTUATION IN EITHER CLOCKWISE OR COUNTER-CLOCKWISE DIRECTION ONLY, REMOVE THE HEAD AND SLIDE THE CAM TOWARD THE REAR OF THE HEAD SUFFICIENTLY TO DISENGAGE FROM THE FLATS ON THE SHAFT. ROTATE THE CAM 90° IN THE OPPOSITE DIRECTION OF THE ACTUATION DESIRED AND RE-ENGAGE THE CAM WITH THE FLATS ON THE SHAFT

CHARACTERISTICS

OPERATING FORCE------3 LBS. MAX.
FULL OVERTRAVEL FORCE------4 LBS. MAX.
RELEASE FORCE-------1/4 LB. MIN.
PRETRAVEL---------3--15° MAX.
DIFFERENTIAL TRAVEL---4---7° MAX.
OVERTRAVEL------5---60° MIN.

SWITCH-BASIC REPLACEMENT-------1MN1

ELECTRICAL DATA (1MN1)

CONTACT ARRANGEMENT
TWO CIRCUIT DOUBLE THROW
DOUBLE BREAK

B 10 A-120, 240, 480, OR 600 VAC
1/2 HP-120 VAC, 1 HP-240 VAC
0.8 A-115 VDC, 0.4 A-230 VDC
PILOT DUTY 600 VAC MAX

UL

SCALE 1/2 TO 1
DO NOT SCALE PRINT

UNLESS OTHERWISE SPECIFIED
DIMENSIONS ARE IN INCHES
TOLERANCES ARE:

ONE PLACE	(.0)	±.030
TWO PLACE	(.00)	±.015
THREE PLACE	(.000)	±.005
ANGLES		±

WEIGHT

(M) 151ML1 ISSUE 4
REPLACES
RELEASE NO.
DRAWING NUMBER M 151ML1
ISSUE X 12
CHECK K.F.M. 4 APR 58
CHECK J.W.M. 4 APR 58
CHECK G.C.H. 4 APR 58
CHECK
DRAWN O.M.W. 12 MAR 58

REVISIONS
A C011247 O.M.W. 12 MAR 58
B C012789 M.B.F. 15 MAY 58
C C018841 H.B.W. 21 JAN 65
D C020578 M.B.F. DEC 65
E C026064 M.B.S. 25 JUNE 69
F CO 52194-D TSK 23 SEPT 83
G C055051-B JAP 17 DEC 84
H C074287 G.J.W. 22 APR 93

FO-80378 003