SYMBOL DEFINITION		
A DIMENSION WITHOUT AN INSPECTION REPORT SYMBOL ( ) DOES NOT REQUIRE INSPECTION. IT MAY BE CONTROLLED ON THE INDIVIDUAL COMPONENT DRAWING.	TOTAL NO OF INSPECTIONS REQUIRED	48
	LAST NO. USED	25

MISSING SYMBOLS
NO MISSING SYMBOL NUMBER

DWG STATUS					ZONE	REVISION HISTORY	AUTH	DR	APVD 1	APVD 2
DATE	STG	REV	N/P	CHG						
29N001	R	04	-	-		CLEARED REVISION COLUMN, REDRAWN TO PD , ADDED LOGO & NOTES	217702	LEG	GEG	JH
13FE06	R	04	AA			25.75 +0.35/-0.15 WAS 25.75, 2X 14 +0.15 /-0.25 TYP WAS 2X 14 TYP AND ADDED NOTE TO DIM # 19	277416	EFS	FRG	EST

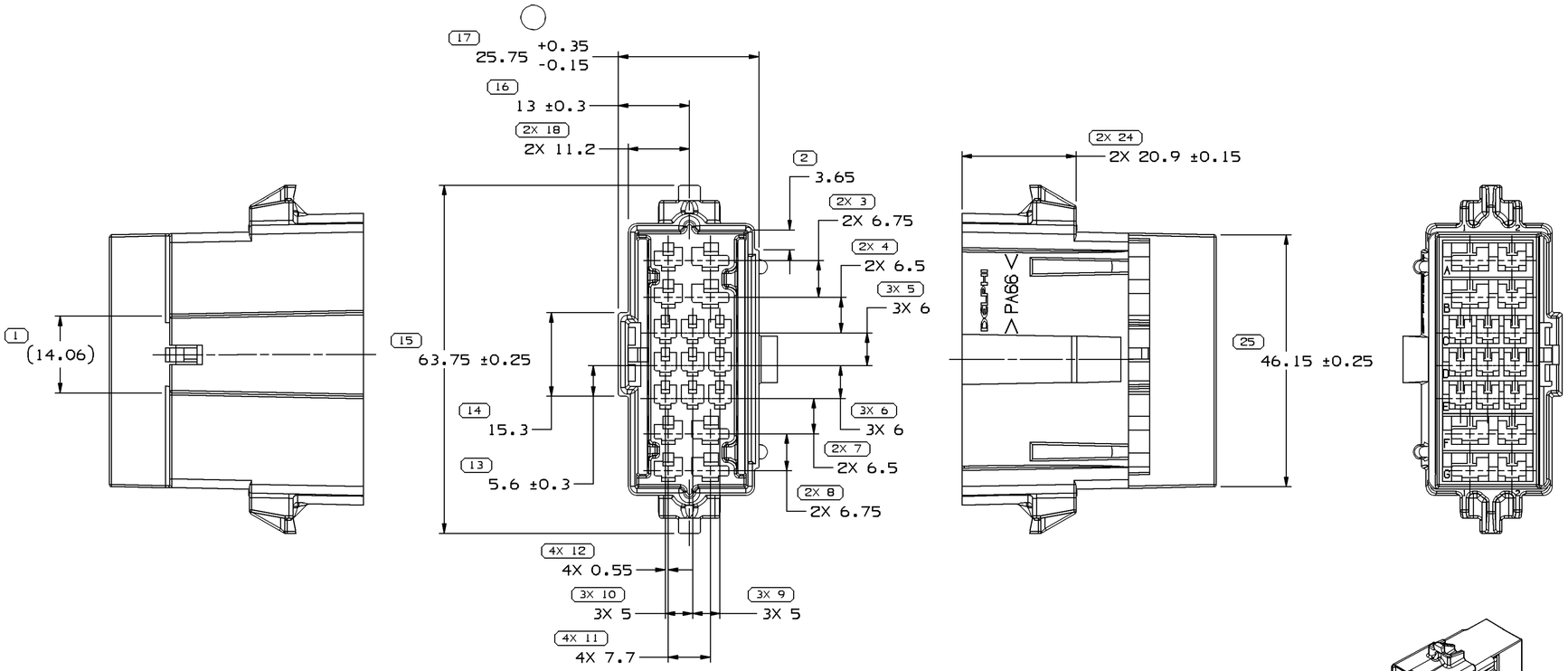

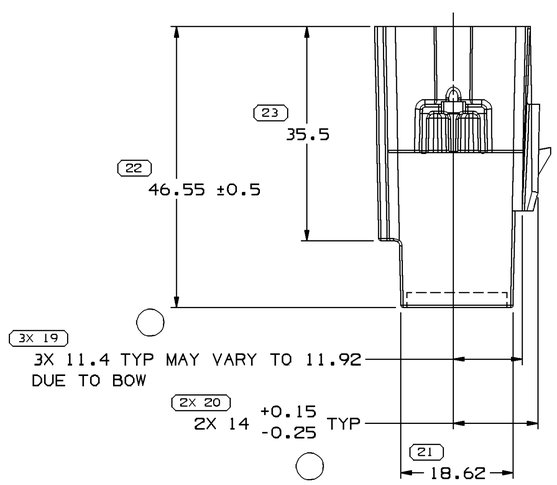

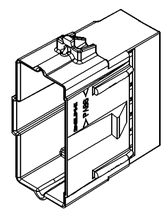

NOTES

1. UNLESS OTHERWISE SPECIFIED AND/OR INDICATED:

   DIMENSIONS ARE TO FACE OF VIEW SHOWN AND AUTOMATICALLY ROUNDED BY COMPUTER FOR INSPECTION (SEE MATH MODEL FOR PRECISE DIMENSIONS). FOR ALL OTHER DIMENSIONS NOT SHOWN BUT REQUIRED FOR TOOL BUILD, SEE MATH MODEL FOR PRECISE TOOL PATH DATA.

2. MATERIAL RECYCLING CODE >PA66< PER SAE 11469.
   (2.3)X(0.1) RAISED CHARACTERS AS SHOWN TO BE LOCATED ON ANY EXTERIOR SURFACE.
   OPTIONAL CONSTRUCTION TO BE NO MATERIAL RECYCLING CODE.

3. MATING COMPONENTS OR EQUIVALENT:
   CONNECTOR 12015504

4. THIS PART ACCEPTS THE FOLLOWING COMPONENTS OR EQUIVALENT:
   CAVITIES A1,B1,F1 & G1 TO ACCEPT 12020125 TERMINAL.
   CAVITIES C1,C2,C3,D1,D2,D3,E1,E2 & E3 TO ACCEPT 12020115 TERMINAL.
   CAVITIES A2,B2,F2 & G2 TO ACCEPT 12020119 TERMINAL.
   SECONDARY LOCK 12015511

5. (2.3)X(0.1) RAISED DELPHI CORPORATE BRAND TO BE LOCATED ON ANY EXTERIOR SURFACE, PREFERABLY VISIBLE AT FINAL ASSEMBLY. OPTIONAL CONSTRUCTION TO BE "PED" OR NO LOGO.

17 PROCESS SENSITIVE DIMENSION

DIMENSIONS ENCLOSED IN ( ) INDICATE REFERENCE DIMENSIONS AND NO TOLERANCE LIMITS ARE ESTABLISHED

DIMENSIONAL RANGE (MM)									CHART E1
FROM TO	> 0 20	> 20 30	> 30 70	> 70 100	> 100 150	> 150 200	> 200 250	> 250 300	> 300 400
TOLERANCE UNLESS OTHERWISE SPECIFIED									
	±0.15	±0.2	±0.3	±0.4	±0.5	±0.6	±0.8	±1	±1.2
ANGULAR TOLERANCE ±2°									

DWG TYPE: PART DRAWING

STYLE

VOLUME (CU³): 16.371

DISTR CODE: D

UNLESS OTHERWISE SPECIFIED
THIS DOCUMENT IS IN ACCORDANCE WITH ASME Y14.5M-1994 AS AMENDED BY THE GM GLOBAL DIMENSIONING AND TOLERANCING ADDENDUM-2001. SEPARATE PATTERNS OF FEATURES MAY BE BAGED SEPARATELY REGARDLESS OF DATUM REFERENCES.

ALL DIMENSIONS ARE IN MILLIMETERS

REFERENCE

THIRD ANGLE PROJECTION

DO NOT SCALE

USE MATH DATA

CAD UNIGRAPHICS

DELPHI

DELPHI PACKARD ELECTRIC SYSTEMS
WARREN, OH

		DATE
DR		
APVD1	JOHN M. SOVA	14JL81
APVD2	E. E. SEIDEL	22JL81
APVD3	S. H. SCHRAMME	22JN81
APVD4		
APVD5		

SUBSTANCES OF CONCERN AND RECYCLED CONTENT PER DELPHI 10949001

MATERIAL: M3592001 PA66 HS IM-BLK

DRAWING NAME: CONN 17 M M/P 280 480

DRAWING NUMBER: 12020629

SIZE	SCALE	FRAME NO	SHEET NO	STG	REV	N/P
A1	2:1	1 OF 1	1 OF 1	R	04	AA

User: jxv45
Part: 12020629-CUS01-S01
Message:
Date: 30-Mar-06 Time: 23:29