rev	ecn no	dr	date
A	DG09-0333	B L	2009-10-09
B	DG09-0361	B L	2009-11-19
C	DG10-0031	B L	2010-01-19

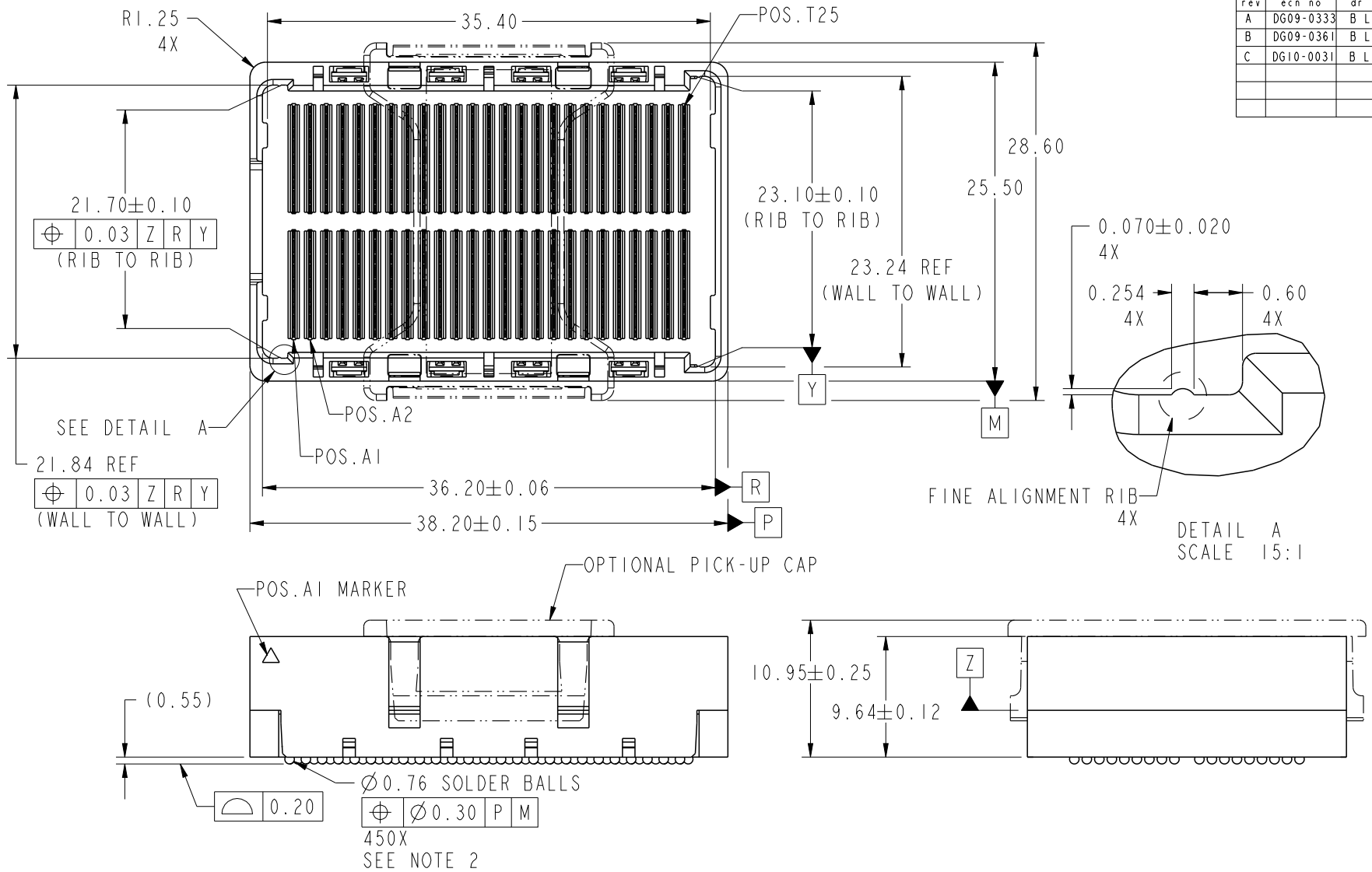

spec ref	*	dr	Bill Lin	2010/02/02	projection	mm	size A4 / scale 3:10
tolerance std ASME Y14.5 -	TOLERANCES UNLESS OTHERWISE SPECIFIED	eng	Nickor Zuo	2011/06/01			ecn no ELX-DG-003943-1
		chr	Alex Cao	2011/06/24			
		appr	Pei-Ming Zheng	2011/06/27	product family	GIG-Array	rel level Released
surface ✓ -	linear 0.X ±0.30; 0.XX ±0.10; 0.XXX ±0.05; angular 0° ±2°	FCI www.fci.com	title GIG-Array 10mm PLUG ASSY. 200 SIG. POS.		dwg no 10107377		rev D
			cat. no. *		Product - Customer Drw		sheet 1 of 5

Copyright FCI.

Pro/E File - REV C - 2009-06-09

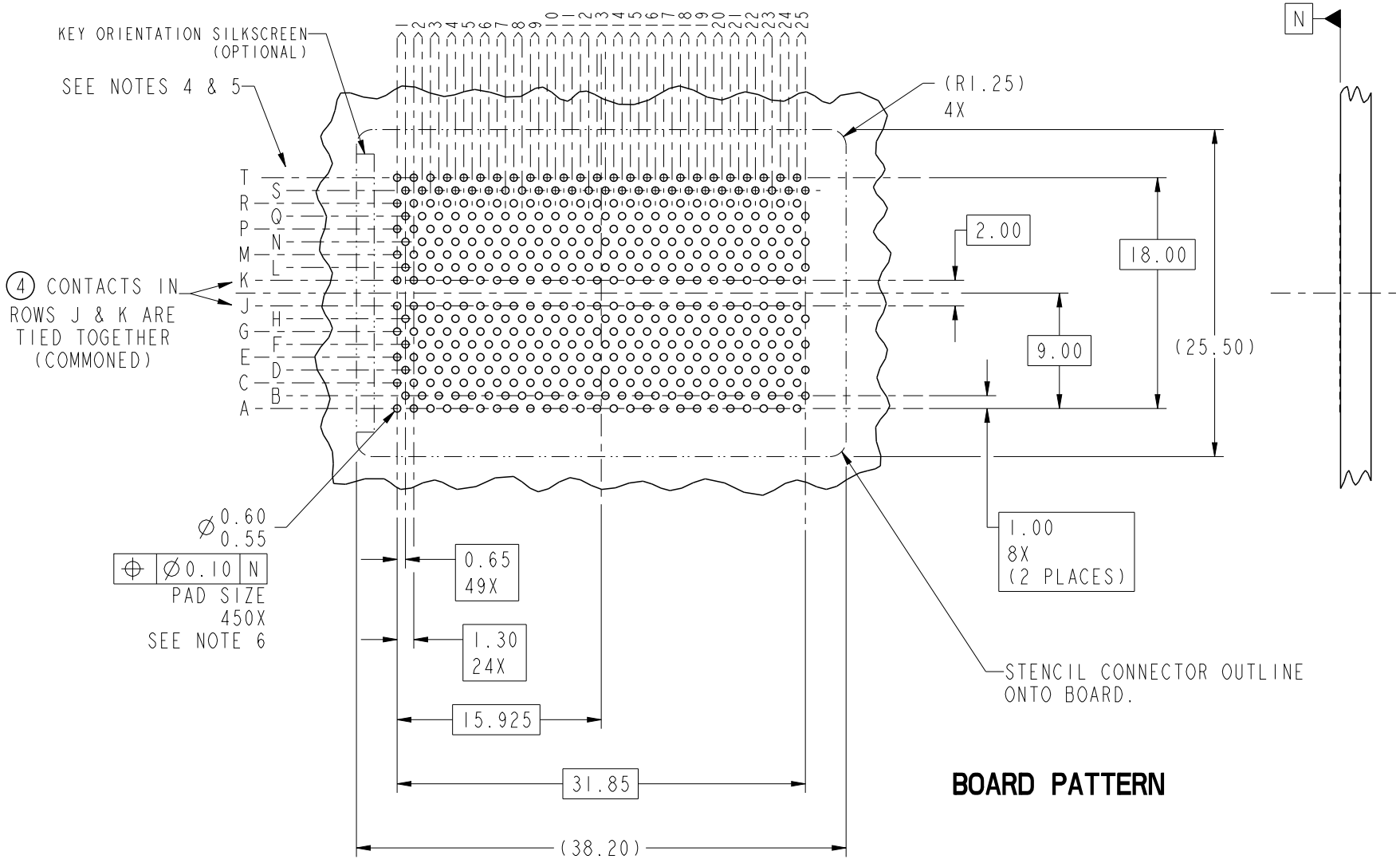

BOARD PATTERN

spec ref	*	dr	Bill Lin	2010/02/02	projection	mm	size A4 / scale 21:10
tolerance std ASME Y14.5 -	TOLERANCES UNLESS OTHERWISE SPECIFIED	eng	Nickor Zuo	2011/06/01			ecn no ELX-DG-003943-1
		chr	Alex Cao	2011/06/24			
		appr	Pei-Ming Zheng	2011/06/27	product family	GIG-Array	rel level Released
surface ✓ -	linear 0.X ±0.30; 0.XX ±0.10; 0.XXX ±0.05; angular 0° ±2°	www.fci.com	title GIG-Array 10mm PLUG ASSY. 200 SIG. POS.		dwg no 10107377		rev D
			cat. no. *		Product - Customer Drw		sheet 2 of 5

Copyright FCI.

Pro/E File - REV C - 2009-06-09

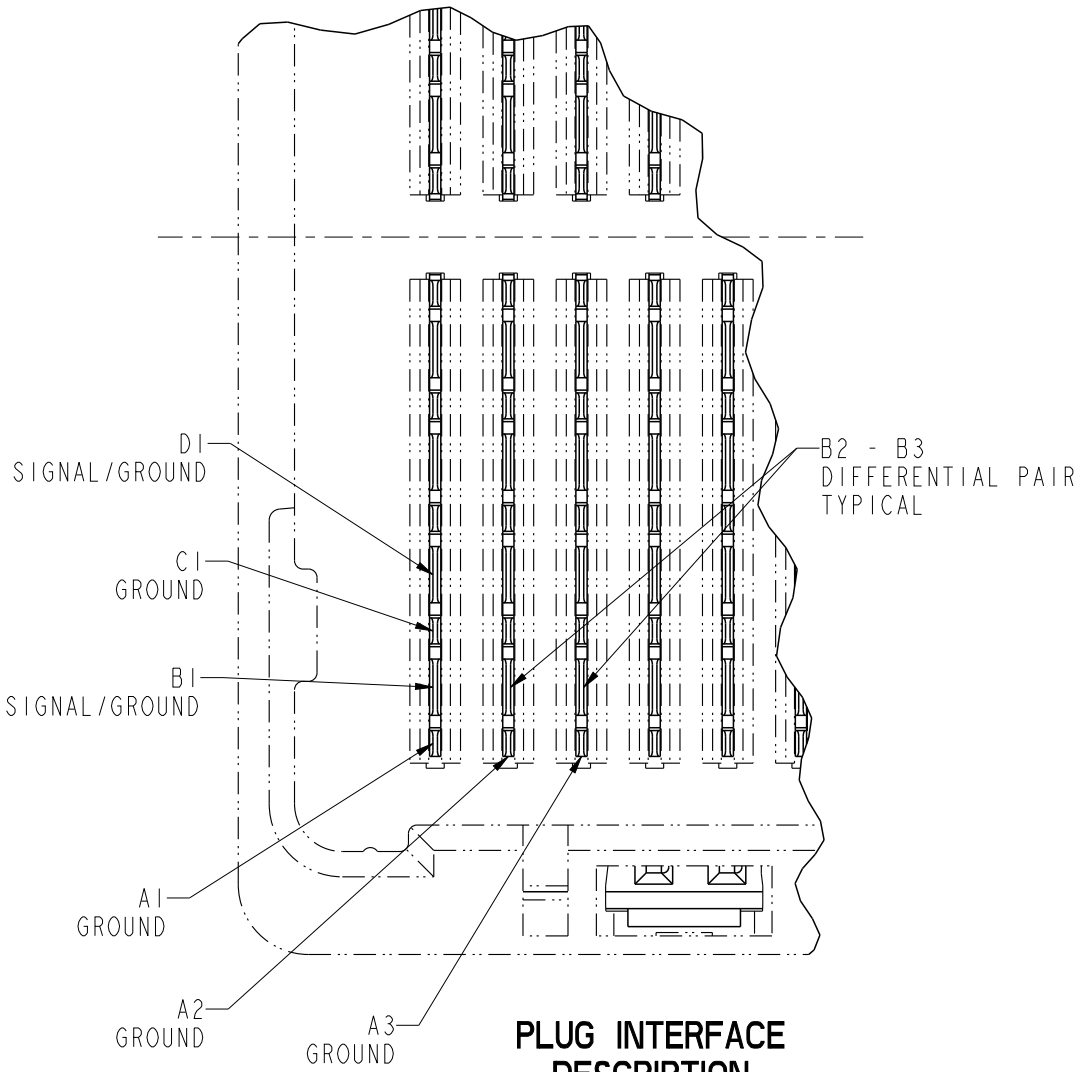

PLUG INTERFACE DESCRIPTION

spec ref	*			dr	Bill Lin	2010/02/02	projection	mm	size A4 / scale 3:10
tolerance std ASME Y14.5 -	TOLERANCES UNLESS OTHERWISE SPECIFIED			eng	Nickor Zuo	2011/06/01			
				chr	Alex Cao	2011/06/24			ecn no ELX-DG-003943-1
				appr	Pei-Ming Zheng	2011/06/27	product family	GIG-Array	rel level **Released**
surface ✓ -	linear	0.X	±0.30	FCI www.fci.com	title GIG-Array 10mm PLUG ASSY. 200 SIG. POS.		dwg no 10107377		rev **D**
		0.XX	±0.10						
		0.XXX	±0.05						
	angular	0°	±2°		cat. no. *		Product - Customer Drw		sheet 3 of 5

Pro/E File - REV C - 2009-06-09

Copyright FCI.

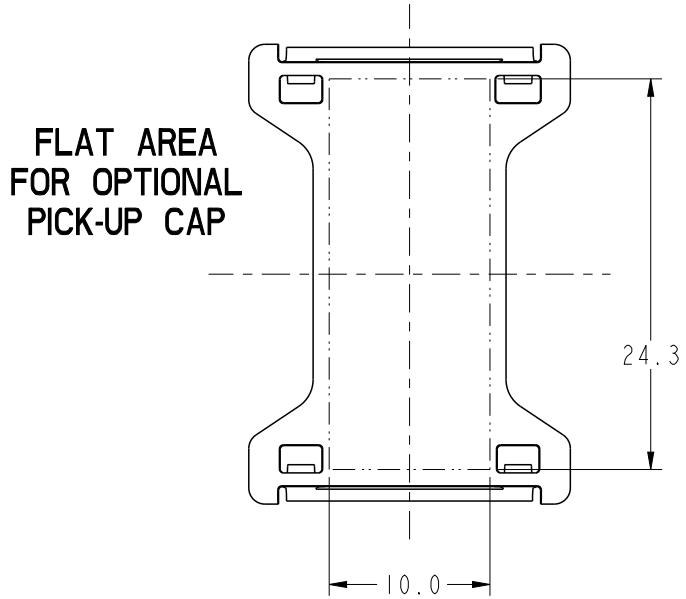

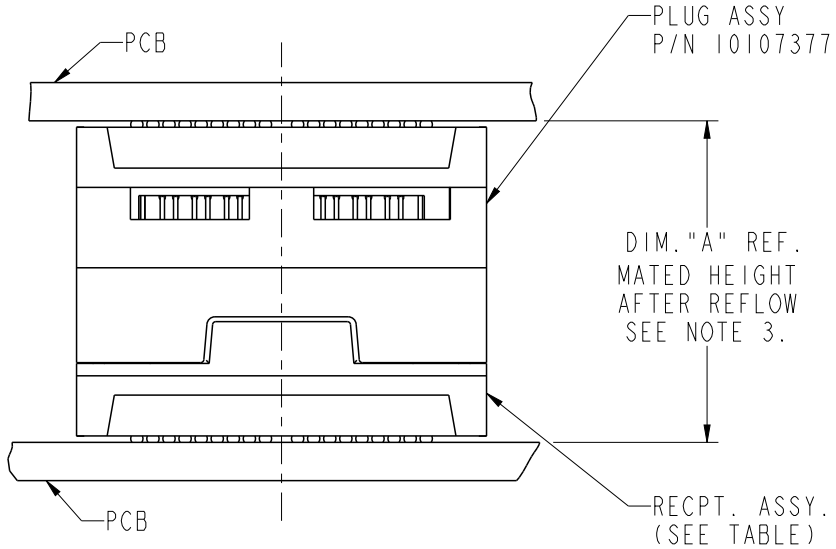

END VIEW OF MATED CONNECTORS

DIM."A"	RECPT. ASSY. P/N
15	55740
20	10026010
21	10081496
25	55741

Copyright FCI.

spec ref	*			dr	Bill Lin	2010/02/02	
tolerance std	TOLERANCES UNLESS OTHERWISE SPECIFIED			eng	Nickor Zuo	2011/06/01	
ASME Y14.5 -				chr	Alex Cao	2011/06/24	
				appr	Pei-Ming Zheng	2011/06/27	
surface	linear	0.X	±0.30				
		0.XX	±0.10				
		0.XXX	±0.05				
-	angular	0°	±2°				

projection

mm

size A4

scale 3:10

ecn no ELX-DG-003943-1

product family GIG-Array

rel level **Released**

FCi

www.fci.com

title GIG-Array 10mm PLUG ASSY. 200 SIG. POS.

dwg no 10107377

rev **D**

cat. no. *

Product - Customer Drw

sheet 4 of 5

Pro/E File - REV C - 2009-06-09

PRODUCT NUMBER	SOLDER BALL COMPOSITION	CONTACT PLATING PERFORMANCE LEVEL
10107377-001	STANDARD (EUTECTIC)	PERFORMANCE-BASED PLATING, QUALIFIED TO MEET THE REQUIREMENTS OF FCI PRODUCT SPECIFICATION GS-12-192, INCLUDING TELCORDIA CENTRAL OFFICE
10107377-001LF	LEADFREE	

NOTES:

1. MAT'L:
   HOUSING: LCP
   CONTACT: COPPER ALLOY
   PLATING (CONTACT): Au OVER Ni.
   UL RATING: 94 V-0
   SOLDERBALL: (SEE TABLE) EUTECTIC SnPb OR LEAD FREE 95.5 Sn/4Ag/0.5Cu.

2. SOLDER BALLS WILL NOT BE PERFECT SHPERICAL SHAPE DUE TO REFLOW ATTACHMENT.

3. MATED HEIGHT EFFECTED BY CUSTOMERS' PCB PAD SIZE, PLATING, SOLDER REFLOW PROFILE & SOLDER PASTE.

4. CONTACTS IN ROWS A,C,E,G,J,K,M,P,R AND T ARE SINGLE BEAM CONTACTS, TYPICALLY USED AS GROUND PINS. (NOTE: CONTACTS IN ROWS J & K ARE TIED TOGETHER [COMMONED])

5. CONTACTS IN ROWS B,D,F,H,L,N,Q AND S ARE DUAL BEAM CONTACTS, TYPICALLY USED AS SIGNAL PINS.

6. SPECIFIED POSITIONAL TOLERANCE DEFINES PAD TO PAD LOCATION WITHIN LAND PATTERN. POSITIONAL TOLERANCE OF LAND PATTERN TO FUDICIAL MARKS OR PCB DATUMS SHALL BE DEFINED BY CUSTOMER. FOR RECOMMENDED PRODUCT APPLICATION AND PCB DESIGN DETAILS, SEE DOC. NO. GS-20-016.

7. FOR PROPER APPLICATION FOLLOW FCI APPLICATION SPECIFICATION GS-20-033. LEAD FREE SOLDER BALLS WILL NOT SOLDER PROPERLY IN A LEADED SOLDER PROCESS DUE TO A HIGHER REFLOW TEMPERATURE. LEADFREE PRODUCT IS THEREFORE NOT BACKWARDS COMPATIBLE WITH LEADED OR SOME SOLDERING APPLICATIONS. REFERENCE FCI APPLICATION SPECIFICATION.

8. THIS PRODUCT MEETS THE EUROPEAN UNION DIRECTIVES AND OTHER COUNTRY REGULATIONS AS DESCRIBED IN GS-22-008. PRODUCT MEETING THIS DIRECTIVE IS INDENTIFIED IN THE CODE NUMBER MARKED ON EACH PART BY HAVING AN "X" IN THE SEVENTH CHARACTER POSTION.

Copyright FCI.

spec ref	*	dr	Bill Lin	2010/02/02	projection	mm	size A4 / scale 3:10
tolerance std ASME Y14.5 -	TOLERANCES UNLESS OTHERWISE SPECIFIED	eng	Nickor Zuo	2011/06/01			ecn no ELX-DG-003943-1
		chr	Alex Cao	2011/06/24			
		appr	Pei-Ming Zheng	2011/06/27	product family	GIG-Array	rel level Released
surface ✓ -	linear 0.X ±0.30; 0.XX ±0.10; 0.XXX ±0.05; angular 0° ±2°	www.fci.com	title GIG-Array 10mm PLUG ASSY. 200 SIG. POS.		dwg no 10107377		rev D
			cat. no. *		Product - Customer Drw		sheet 5 of 5

Pro/E File - REV C - 2009-06-09