DRAWING MADE IN THIRD ANGLE PROJECTION

THIS DRAWING IS UNPUBLISHED. RELEASED FOR PUBLICATION ,19 .

© COPYRIGHT 19 BY AMP INCORPORATED. ALL INTERNATIONAL RIGHTS RESERVED.

PROD CODE	LOC	DIST
S327	DF	F0

P	F	ZONE	LTR	DESCRIPTION	DATE	APPD
	✓		G	REV & REDWN PER DF-5332 A.G.	1-92	DG
	✓		H	REV PER 0600-1388-93 TA	5-4-94	DG

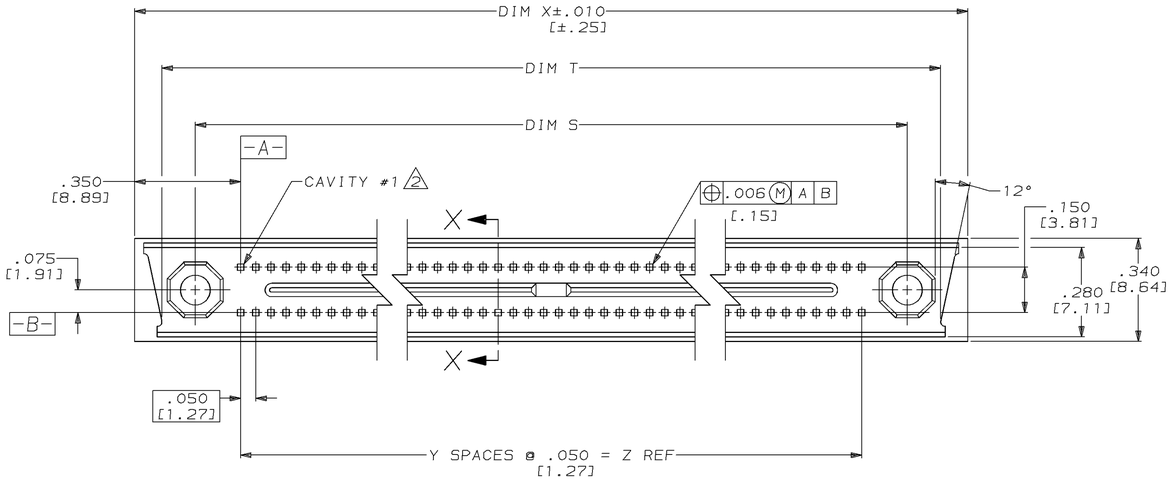

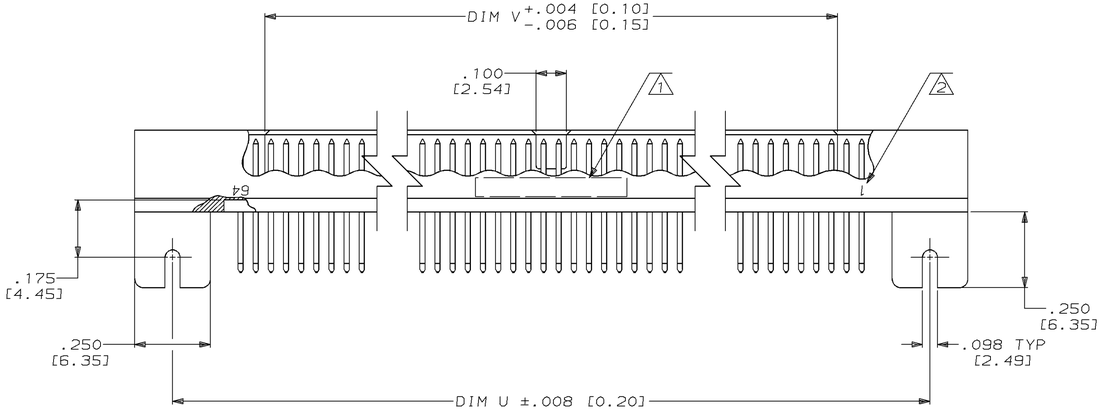

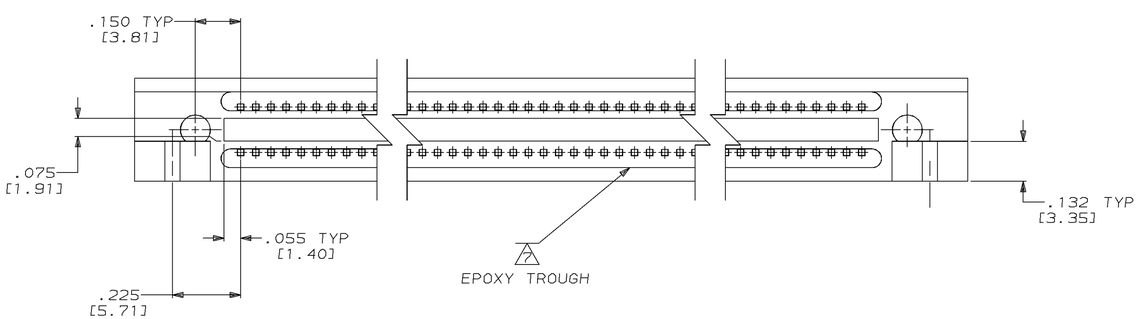

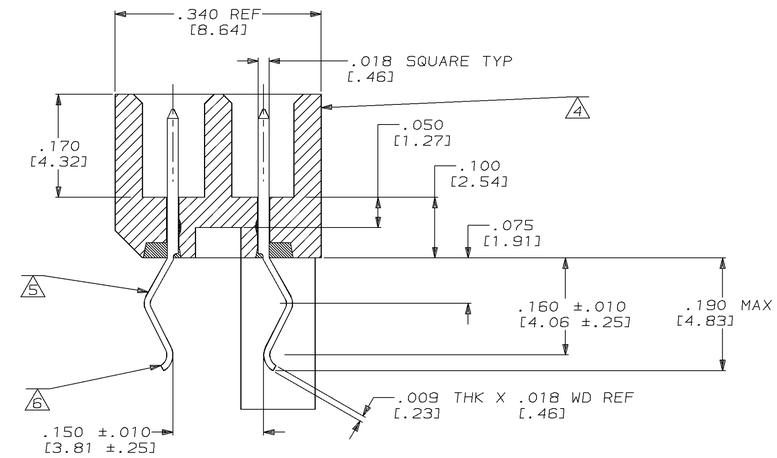

SECTION X-X
SCALE 8:1

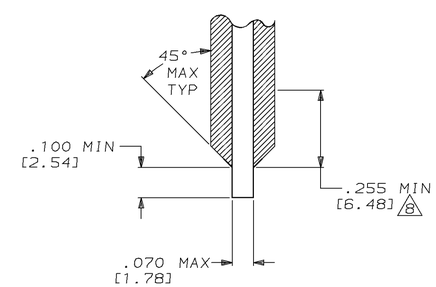

PC BOARD 9

CUSTOMER PART NUMBER	DIM Z	DIM Y	DIM X	DIM V	DIM U	DIM T	DIM S	NUMBER OF CONTACTS	PART NUMBER
73030SOCN794706-2	3.150 [80.01]	63	3.850 [97.79]	2.990 [75.95]	3.600 [91.44]	3.670 [93.22]	3.450 [87.63]	128	534664-1

1. AMP, PART NUMBER & DATE CODE MARKED THIS SIDE ONLY.
2. NUMBERS INDICATING END POSITIONS MARKED THIS SIDE 1 AND 64, OPPOSITE SIDE 64 AND 1.
3. MEET ALL APPLICABLE REQUIREMENTS OF MIL-C-55302.
4. HOUSING MATERIAL: LIQUID CRYSTAL POLYMER PER MIL-M-24519, GLCP-30F; COLOR: GRAY.
5. CONTACT MATERIAL: BRASS.
6. CONTACT FINISH: .000050 GOLD IN CONTACT AREA, NICKEL UNDERPLATE ALL OVER, TAILS DIPPED BY AMP FOR SOLDERING.
7. EPOXY ADDED TO BOTTOM WHERE CONTACT TAILS EXIT FROM THE HOUSING. EPOXY SHALL BE SUB-SURFACE BETWEEN CONTACT ROWS WHERE PCB INTERFACES.
8. THE POINT WHERE THE CONNECTOR EARS INTERFACES THE P.C. BD. THE BOARD SHALL BE NO THICKER THAN THE CORE FITTING INTO THE CONNECTOR SLOT.
9. EXTREME CARE AND CAUTION MUST BE TAKEN WHEN INSERTING P.C. BD. ON CONTACT TAILS.

DO NOT SCALE PRINT.
UNLESS SPECIFIED
DIMENSIONS IN INCHES [mm]
TOLERANCES ON :
2 PLC DEC ± ____
3 PLC DEC ± .005 [0.13]
ANGLES ± 0° 30'

MATERIAL 4 5

FINISH 6

DR 2-20-91 T. SHUEY
CHK 12-31-91 D.GUTTER
APPD 12-31-91 D.GUTTER
APPD 12-31-91 D.GUTTER
PRODUCT SPEC –
APPLICATION SPEC –
WEIGHT –

AMP Incorporated
Harrisburg, PA 17105-3608

NAME
ASSEMBLY, PIN HEADER, MINI-BOX, SHROUDED, CARD EXTENDER

SIZE D | CAGE CODE 00779 | DRAWING NO 534664
SCALE 4:1 | SHEET 1 OF 1

CUSTOMER DRAWING

AMP 1756-3 REV 11-89

04 MAY 1994 15:33:37 AMP34874 <&R1268>DEPT8039>U.BOX