Alle Rechte vorbehalten/ *All rights reserved*

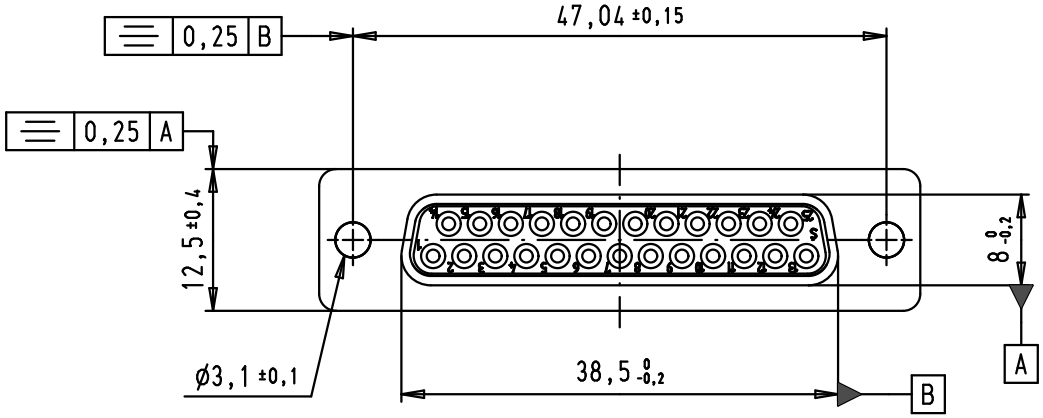

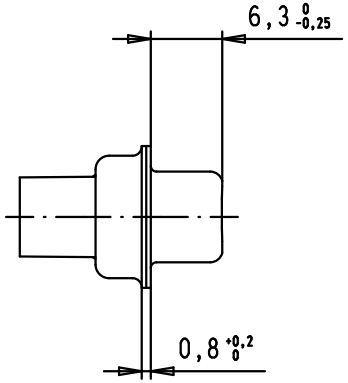

Panel cut out

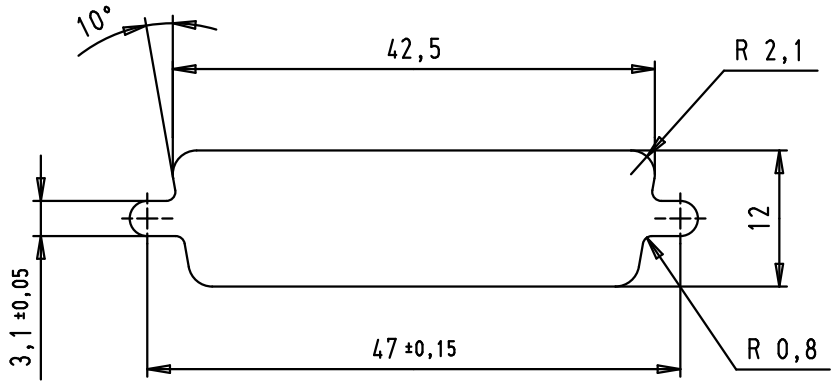

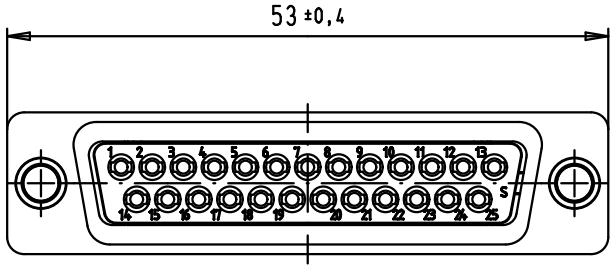

				Dat.	Name
34784	13/02/08	PK	Detail.	09/04/02	CV
33106	22/09/05	JMDR	Insp.		
31571	12/11/03	SH	Stand.		
31526	31/07/03	TCP			
29768	09/04/02	CV			
Mod.	Dat.	Name			

All Dim. in mm
Orig. Size DIN A 4

D-Sub, female, straight, 25 poles, for crimp contacts, tin plated shell

Maßstab/ *Scale* 1,5:1

HARTING EURL
F-95972 Paris

TB 09 67 025 4701

Sub.

Blatt/ *Page* 1/2