# TL(L)A(G)-7 SERIES

*Tact Switch*
*Illuminated*

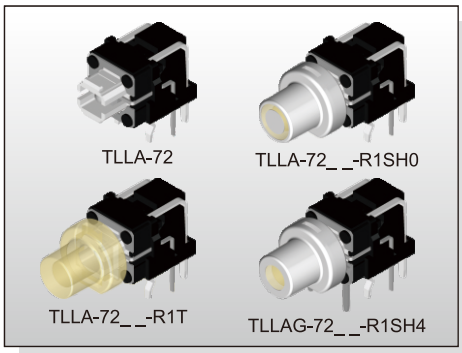


## FEATURES

※Horizontal operation
※Various LED colors
※Options of different cap color & mark

## APPLICATION

※Automotive
※Server
※Laptop, IPC

## SPECIFICATION

| | |
|---|---|
| Contact Rating | 50mA, 12V DC |
| Contact Resistance | 100mΩ max. |
| Insulation Resistance | 100MΩ min. 500V DC |
| Dielectric Strength | 250V AC/1 minute |
| Operating Force | 160±50gf / 260±50gf |
| Travel | 0.2mm |
| Operating Life | 500, 000 cycles |
| Operating Temp. | -40°C ~ +85°C |
| Storage Temp. | -40°C ~ +85°C |

## HOW TO ORDER

**T L □ A □ - 7 □ □ □ - □ □ - □ □ □ - □ - □**

- □=Without LED / L=Tact+LED
- Right Angle
- □=Without Ground Pin / G=With Ground Pin
- Operating Force: 2=160gf / 3=260gf
- LED Specification: □=Without LED or A / B
- LED Color: □=Without LED / Refer Color Options
- Terminals Plating: □=Ag Plating / A3=Au Plating
- CAP Type: □=Without Cap / R1=6.50mm / R2=8.00mm
- CAP Color: K=Black / S=Silver / T=Transparent
- CAP Mark: □=No Marking (EX:H0=O)
- V=RoHS & Lead Free Solderable / Q=Halogen Free (Without Cap)
- Package: B=Tube (Except TLLAG-7) / A=Tray

## CIRCUIT

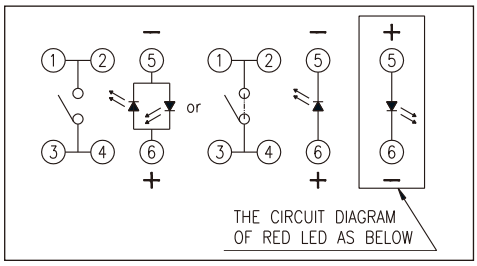


## PACKAGE

**<Tray>**
TLLA-7□-A: 100 pcs.
**<Tube>**
TLLA-7□-B: 64 pcs.

## TLLA-72□□-R□

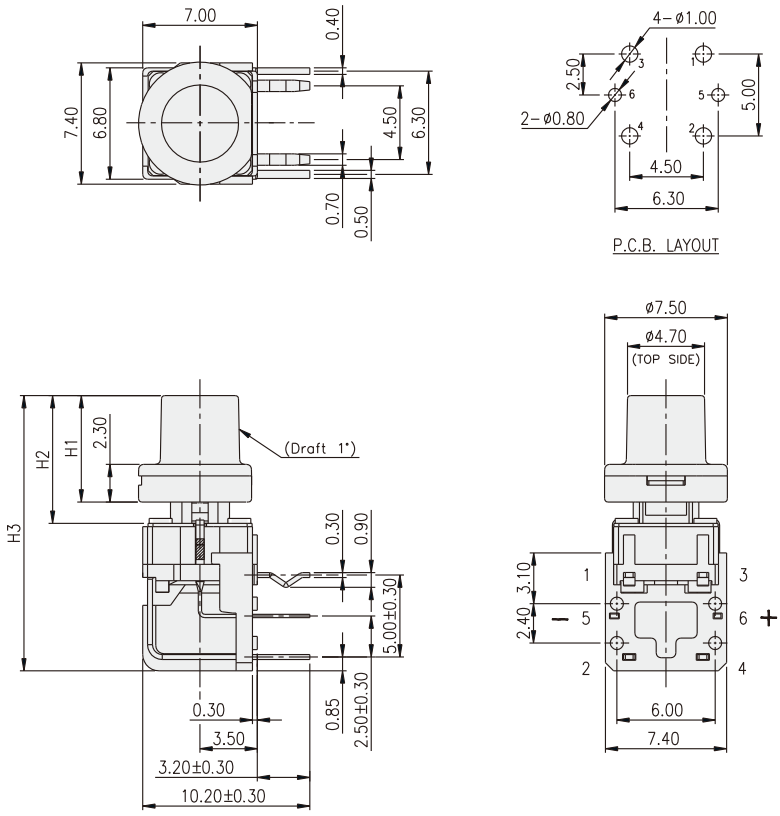


| PART NO. | H1 | H2 | H3 |
|---|---|---|---|
| TLLA-7□□□-□-R1□ | 6.50 | 7.80 | 16.80 |
| TLLA-7□□□-□-R2□ | 8.00 | 9.30 | 18.30 |

NOTE：

| | CAP | |
|---|---|---|
| | MARK | COLOR |
| SH0 | | SILVER |
| KH0 | | BLACK |
| SH1 | | SILVER |
| KH1 | | BLACK |
| SH2 | | SILVER |
| KH2 | | BLACK |
| SH3 | | SILVER |
| KH3 | | BLACK |
| SH4 | | SILVER |
| KH4 | | BLACK |
| SH7 | | SILVER |
| KH7 | | BLACK |
| SH9 | | SILVER |
| KH9 | | BLACK |
| SHA | | SILVER |
| KHA | | BLACK |
| SHB | | SILVER |
| KHB | | BLACK |

## TLLA-72

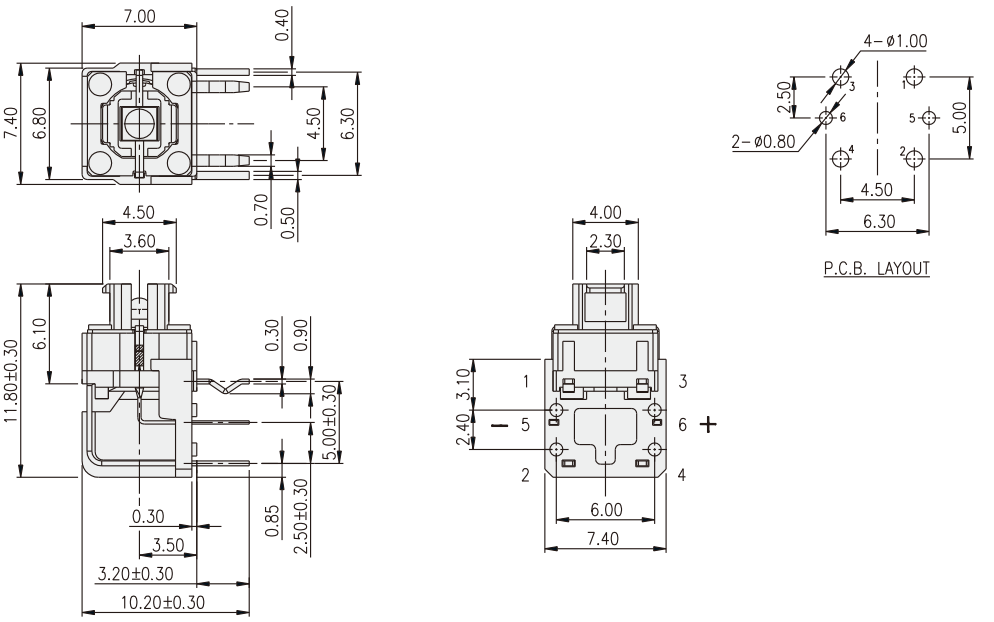


## TLLAG-7

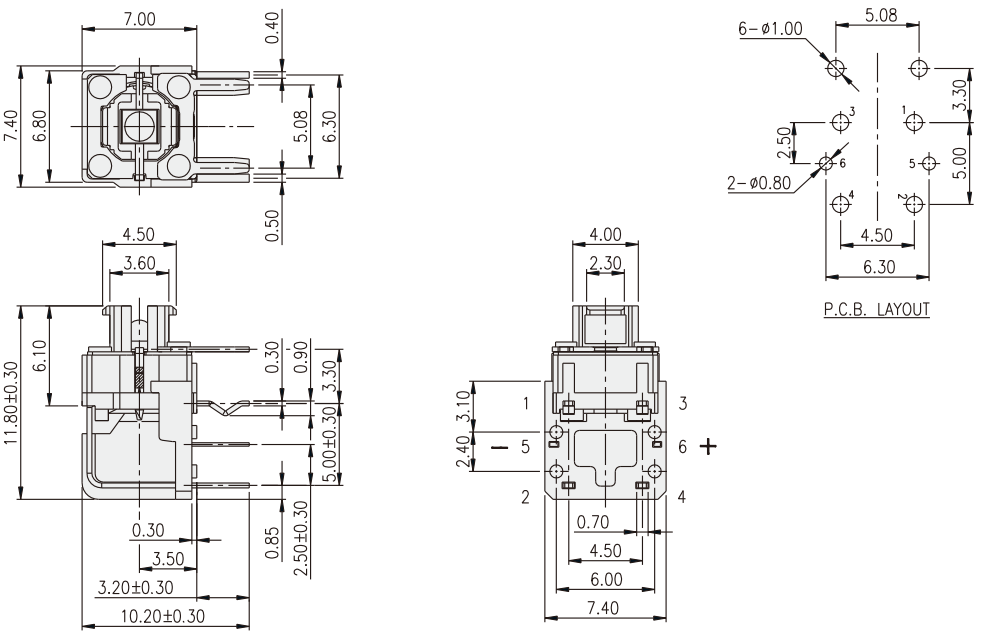


## LED Color Options:

| Part No. | Color | Dominant Wavelenght $\lambda_D$ Typ.(nm) | Luminous Intensity $I_V$ (mcd) Typ. A | Luminous Intensity $I_V$ (mcd) Typ. B | Forward Voltage $V_F$(V) Typ. | Forward Voltage $V_F$(V) Max. | View Angle $2\cdot\theta_{1/2}$ (Degree) A | View Angle $2\cdot\theta_{1/2}$ (Degree) B |
|---|---|---|---|---|---|---|---|---|
| B | Blue | 470 | 70 | 1100 | 3.0 | 3.6 | 140° | 30° |
| PG | Pure Gree | 520 | 160 | 2500 | 3.2 | 3.6 | | |
| G | Yellow Green | 570 | 30 | 550 | 2.0 | 2.3 | | |
| Y | Yellow | 590 | 60 | 1500 | 2.0 | 2.3 | | |
| A | Soft Orange | 605 | 50 | 1500 | 2.0 | 2.3 | | |
| R | Deep Red | 640 | 25 | 800 | 2.0 | 2.3 | | |
| W | Cold White | X:0.30 / Y:0.30 | 350 | 550 | 3.0 | 3.6 | | |