TL(L)A(G)-7 SERIES

Tact Switch
Illuminated

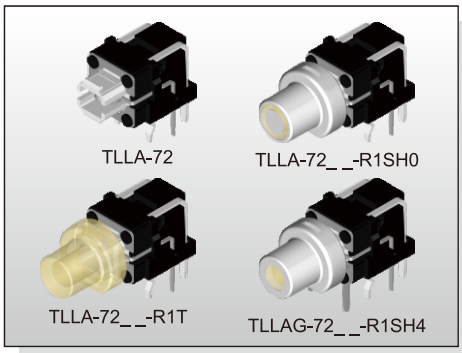

FEATURES

※Horizontal operation
※Various LED colors
※Options of different cap color & mark

APPLICATION

※Automotive
※Server
※Laptop, IPC

SPECIFICATION

Contact Rating	50mA, 12V DC
Contact Resistance	100mΩ max.
Insulation Resistance	100MΩ min. 500V DC
Dielectric Strength	250V AC/1 minute
Operating Force	160±50gf / 260±50gf
Travel	0.2mm
Operating Life	500, 000 cycles
Operating Temp.	-40°C ~ +85°C
Storage Temp.	-40°C ~ +85°C

HOW TO ORDER

T L □ A □ - 7 □ □ □ - □ □ - □ □ □ - □ - □

- □=Without LED / L=Tact+LED
- Right Angle
- □=Without Ground Pin / G=With Ground Pin
- Operating Force: 2=160gf / 3=260gf
- LED Specification: □=Without LED or A / B
- LED Color: □=Without LED / Refer Color Options
- Terminals Plating: □=Ag Plating / A3=Au Plating
- CAP Type: □=Without Cap / R1=6.50mm / R2=8.00mm
- CAP Color: K=Black / S=Silver / T=Transparent
- CAP Mark: □=No Marking (EX:H0=O)
- V=RoHS & Lead Free Solderable / Q=Halogen Free (Without Cap)
- Package: B=Tube (Except TLLAG-7) / A=Tray

CIRCUIT

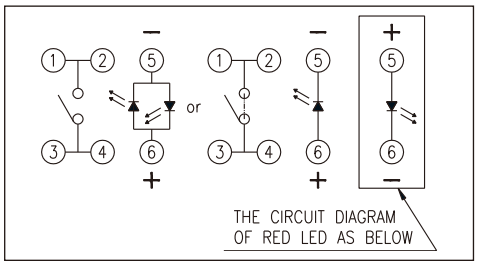

PACKAGE

<Tray>
TLLA-7□-A: 100 pcs.
<Tube>
TLLA-7□-B: 64 pcs.

TLLA-72□□-R□

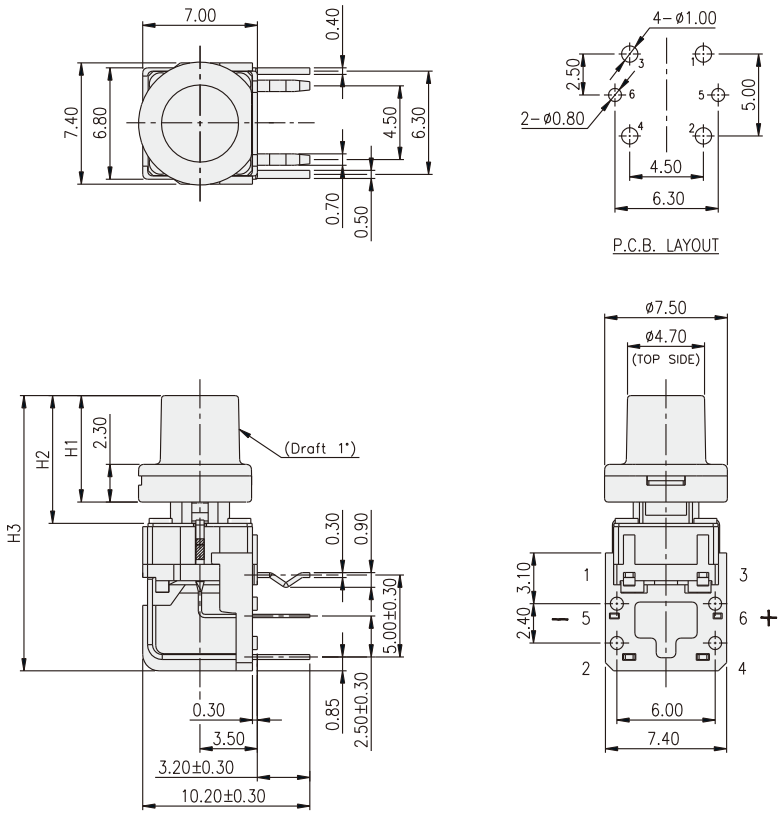

PART NO.	H1	H2	H3
TLLA-7□□□-□-R1□	6.50	7.80	16.80
TLLA-7□□□-□-R2□	8.00	9.30	18.30

NOTE：

	CAP	
	MARK	COLOR
SH0		SILVER
KH0		BLACK
SH1		SILVER
KH1		BLACK
SH2		SILVER
KH2		BLACK
SH3		SILVER
KH3		BLACK
SH4		SILVER
KH4		BLACK
SH7		SILVER
KH7		BLACK
SH9		SILVER
KH9		BLACK
SHA		SILVER
KHA		BLACK
SHB		SILVER
KHB		BLACK

TLLA-72

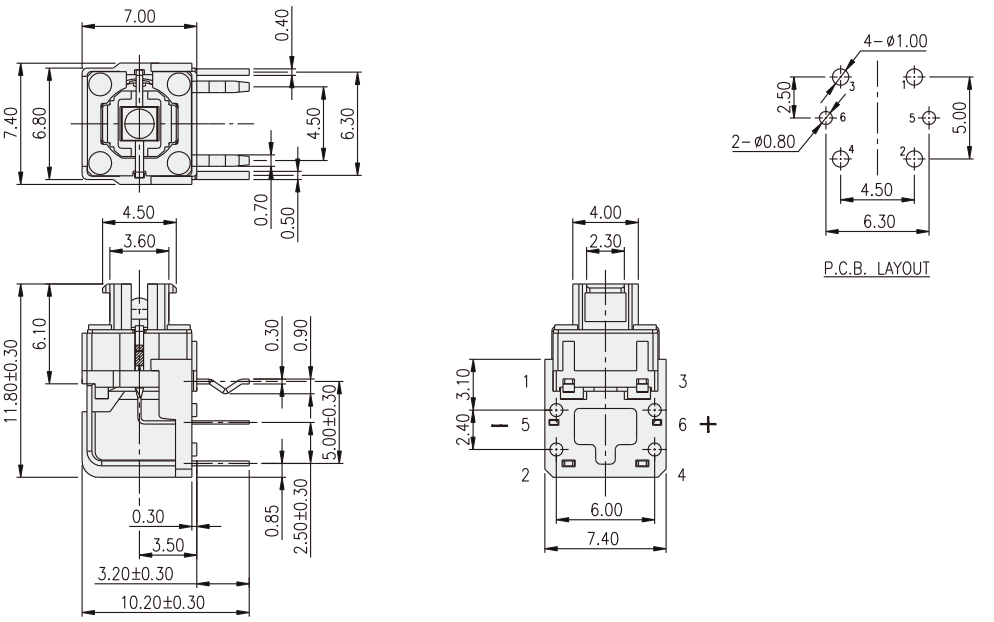

TLLAG-7

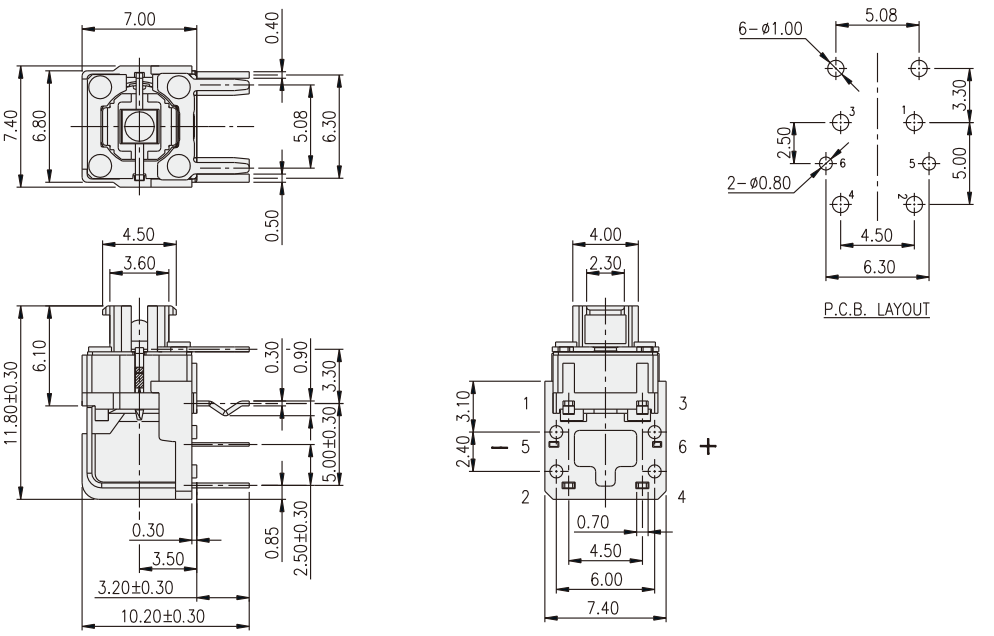

LED Color Options:

Part No.	Color	Dominant Wavelenght λ_D Typ.(nm)	Luminous Intensity I_V (mcd) Typ. A	Luminous Intensity I_V (mcd) Typ. B	Forward Voltage V_F(V) Typ.	Forward Voltage V_F(V) Max.	View Angle $2\cdot\theta_{1/2}$ (Degree) A	View Angle $2\cdot\theta_{1/2}$ (Degree) B
B	Blue	470	70	1100	3.0	3.6	140°	30°
PG	Pure Gree	520	160	2500	3.2	3.6		
G	Yellow Green	570	30	550	2.0	2.3		
Y	Yellow	590	60	1500	2.0	2.3		
A	Soft Orange	605	50	1500	2.0	2.3		
R	Deep Red	640	25	800	2.0	2.3		
W	Cold White	X:0.30 / Y:0.30	350	550	3.0	3.6		