THIS DRAWING IS UNPUBLISHED. RELEASED FOR PUBLICATION -,- .
© COPYRIGHT - By - ALL RIGHTS RESERVED.

LOC	DIST
AJ	16

REVISIONS

P	LTR	DESCRIPTION	DATE	DWN	APVD
	V2	REVISED PER ECO-11-005030	11MAR11	RK	HMR

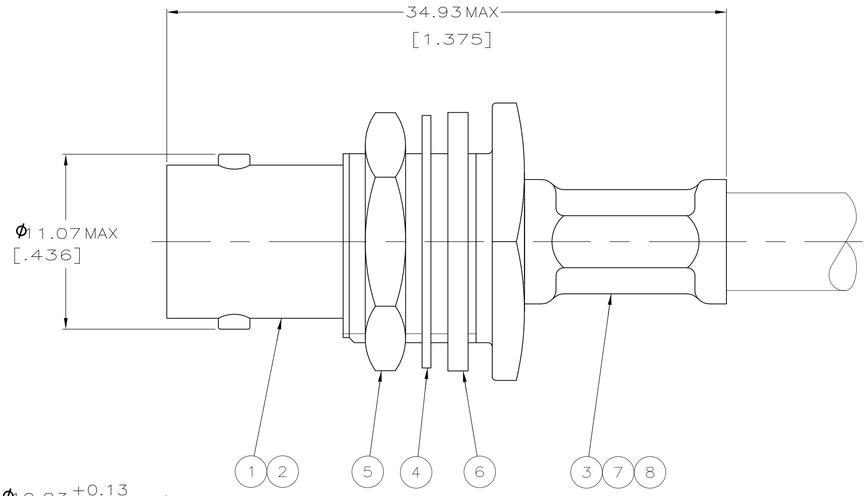

1. MAX PANEL THICKNESS .240
2. CRIMP TOOL: 220190-1
3. BULK PACKAGE
4. USE INSTRUCTION SHEET 9763
5. SPECIAL PACKAGING: BULK PACKAGE 25 PIECES

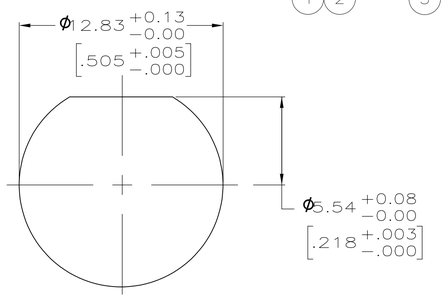

RECOMMENDED PANEL CUTOUT

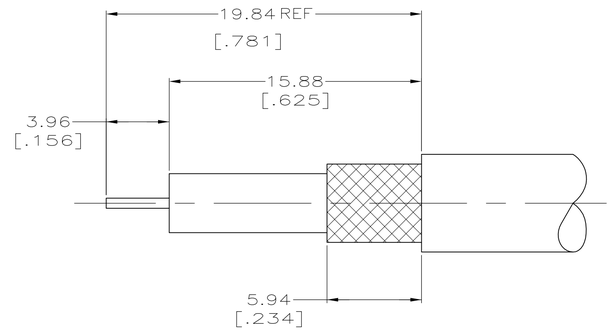

VIEW A

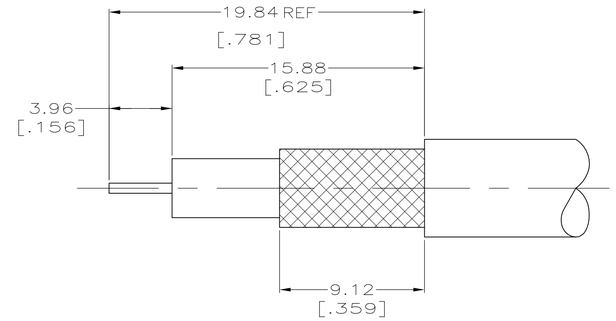

VIEW B

RECOMMENDED STRIP LENGTH

	FOR USE WITH CABLE	VIEW	FERRULE (HEX) CRIMP HEIGHTS	CONTACT (SQ) CRIMP HEIGHTS	DIE SET △2	(8) TUBING, METAL QTY=1	(7) TUBING, PLASTIC QTY=1	(6) GASKET QTY=1	(5) JAM NUT QTY=1	(4) LOCKWASHER QTY=1	(3) FERRULE QTY=1	(2) CONTACT QTY=1	(1) JACK ASSY QTY=1	PART NUMBER
OBSOLETE	CUSTOM CABLE, C/C-24AWG, DOD-.109, JOD-.153	A	4.52 [.178]	1.07 [.042]	852922-2	–	–	329633	1-329631-2	1-329632-2	9-221132-6	413746-5	413744-2	1-413590-7
NOT RELEASED	–	A	4.52 [.178]	1.07 [.042]	852922-1	–	–	–	–	–	–	–	–	1-413590-6
NOT RELEASED	–	A	4.52 [.178]	1.07 [.042]	852922-1	–	–	–	–	–	–	–	–	1-413590-5
OBSOLETE	JIS 3C-2V	A	4.52 [.178]	1.07 [.042]	852922-1	–	–	329633	1-329631-2	1-329632-2	9-221132-4	2-413746-5	413744-7	1-413590-4
△5 OBSOLETE	BELDEN 8218 AND JIS 2.5C-2V	A	4.52 [.178]	1.07 [.042]	852922-2	–	–	329633	1-329631-2	1-329632-2	9-221132-6	1-413746-0	413744-2	1-413590-3
OBSOLETE △5	JIS 2.5C-2W	A	5.41 [.213]	1.07 [.042]	852922-1	–	–	329633	1-329631-2	1-329632-2	9-221132-0	1-413746-0	413744-2	1-413590-2
OBSOLETE △5	JIS 3C-2W	A	6.48 [.255]	1.07 [.042]	852922-1	–	–	329633	1-329631-2	1-329632-2	9-221132-9	2-413746-5	413744-6	1-413590-1
OBSOLETE △3	ZENITH (C/C-.020, DOD-.115, JOD-.210)	A	5.41 [.213]	1.07 [.042]	852922-1	–	–	–	–	–	8-221132-9	2-413746-5	413744-5	1-413590-0
OBSOLETE	RG-59 TYPE WITH ϕ.031 C/C & BELDEN 9295,9266,9240	A	6.48 [.255]	1.07 [.042]	852922-1	–	–	329633	1-329631-2	1-329632-2	9-221132-1	2-413746-0	413744-1	413590-9
	RG-179/U & 187/U	A	4.52 [.178]	1.07 [.042]	852922-2	222001-6	227194-2	329633	1-329631-2	1-329632-2	9-413658-0	1-413746-5	413744-2	413590-8
OBSOLETE	AT&T 734A	A	6.48 [.255]	1.07 [.042]	852922-1	–	–	329633	1-329631-2	1-329632-2	9-221132-3	2-413746-0	413744-4	413590-7
OBSOLETE	TIMES RG-59 DOUBLE BRAIDED,.270 O.D.	A	8.23 [.324]	1.07 [.042]	852922-3	–	–	329633	1-329631-2	1-329632-2	9-221132-2	413746-5	413744-1	413590-6
OBSOLETE	BELDEN 8281,9231 & AT&T 728 AND JIS 5C-2V	B	8.23 [.324]	1.07 [.042]	852922-3	–	–	329633	1-329631-2	1-329632-2	9-221132-2	2-413746-0	413744-3	413590-5
	AT&T KS 19224 L2 AND JIS 1.5C-XV	A	4.52 [.178]	1.07 [.042]	852922-2	222001-6	227194-2	329633	1-329631-2	1-329632-2	9-413658-2	1-413746-5	413744-2	413590-4
	BELDEN 8218 AND JIS 2.5C-2V	A	4.52 [.178]	1.07 [.042]	852922-2	–	–	329633	1-329631-2	1-329632-2	9-221132-6	1-413746-0	413744-2	413590-3
OBSOLETE	RG-59/U,59A/U & 59B/U	A	6.48 [.255]	1.07 [.042]	852922-1	–	–	329633	1-329631-2	1-329632-2	9-221132-1	413746-5	413744-1	413590-2
OBSOLETE	BELDEN 88241	A	6.48 [.255]	1.07 [.042]	852922-1	–	–	329633	1-329631-2	1-329632-2	9-413658-3	413746-5	413744-1	413590-1

THIS DRAWING IS A CONTROLLED DOCUMENT.

DIMENSIONS: mm [INCHES]

TOLERANCES UNLESS OTHERWISE SPECIFIED:
0 PLC ± –
1 PLC ± –
2 PLC ± 0.41 [.016]
3 PLC ± –
4 PLC ± –
ANGLES ± –

MATERIAL –
FINISH –

DWN D. LAMAN 4-6-90
CHK R. E. RUTH 4/26/90
APVD –
PRODUCT SPEC –
APPLICATION SPEC –
WEIGHT –

TE Connectivity

NAME JACK, BULKHEAD, 75 OHM, HEX CRIMP, BNC

SIZE	CAGE CODE	DRAWING NO	RESTRICTED TO
A1	00779	C-413590	–

CUSTOMER DRAWING | SCALE 1:1 | SHEET 1 OF 1 | REV V2