THIS DRAWING IS UNPUBLISHED. RELEASED FOR PUBLICATION 20
© COPYRIGHT 20 BY - ALL RIGHTS RESERVED.

REVISIONS

P	LTR	DESCRIPTION	DATE	DWN	APVD
	A	INITIAL RELEASE	07MAY2015	DL	CW

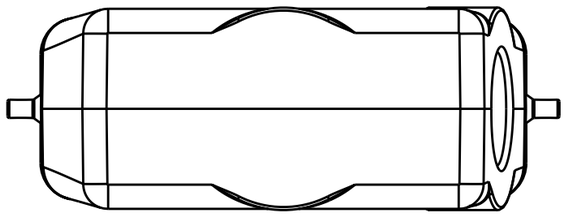

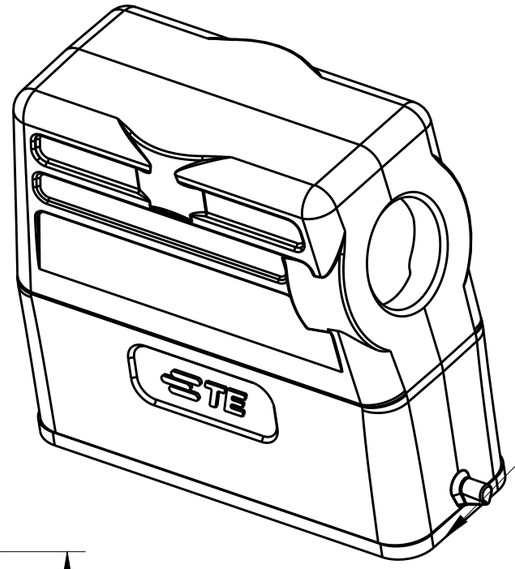

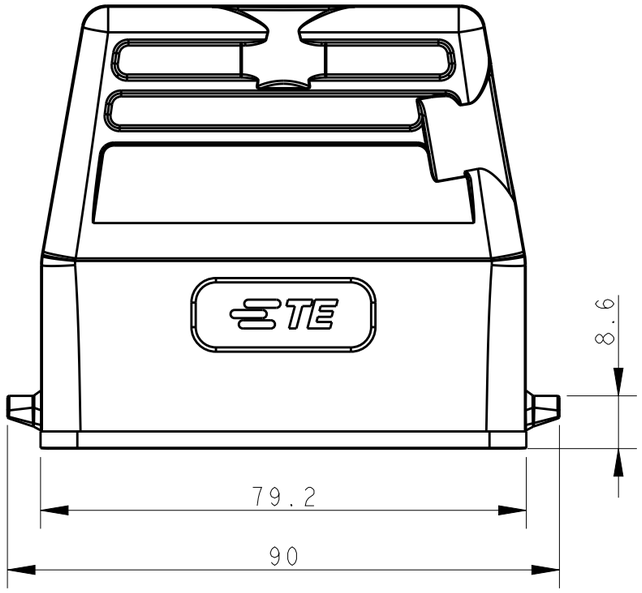

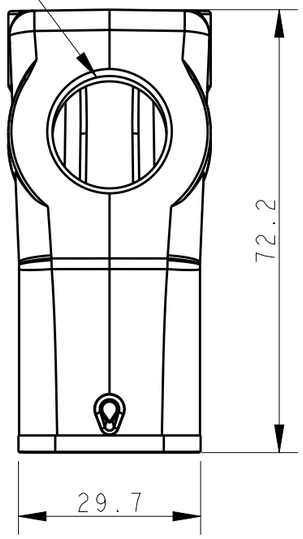

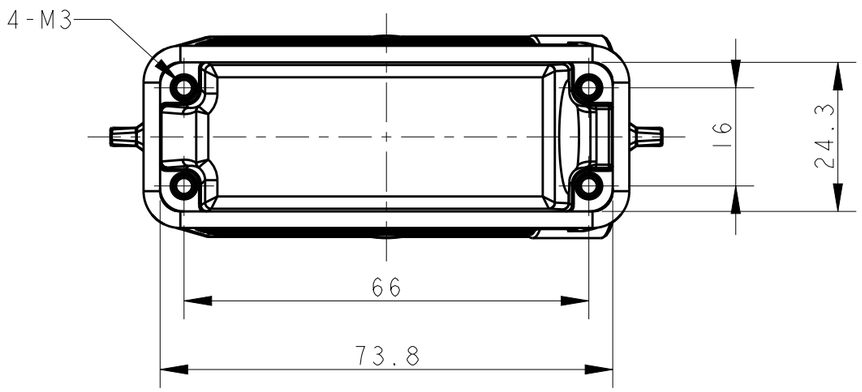

NOTES:
1. TECHNICAL CHARACTERISTICS:
   BODY MATERIAL: DIE CAST ALUMINIUM ALLOY
   SURFACE TREATMENT: POWDER-COATED, GRAY
   OPERATION TEMPERATURE: -40-+125°C
   DEGREE OF PROTECTION: IP65 (MATED)

注释：
1. 技术参数：
   主体材料： 铝合金
   表面处理： 粉末喷涂， 灰色
   工作温度： -40-+125°C
   防护等级： IP65(配合)

ASSEMBLY PART NUMBER	ASSEMBLY PART DESCRIPTION	PG/M	REMARK
TI339160111-000	HI6A-TSH-PG11	PG11	-
TI339160116-000	HI6A-TSH-PG16	PG16	-
TI339160116-100	HI6A-TSH-PG16	PG16	SEAL FIXED BY GLUE
TI339160120-000	HI6A-TSH-M20	M20	-
TI339160121-000	HI6A-TSH-PG21	PG21	-
TI339160125-000	HI6A-TSH-M25	M25	-

THIS DRAWING IS A CONTROLLED DOCUMENT.

DIMENSIONS: mm

TOLERANCES UNLESS OTHERWISE SPECIFIED:
0 PLC ±-
1 PLC ±-
2 PLC ±-
3 PLC ±-
4 PLC ±-
ANGLES ±-

MATERIAL - -
FINISH - -

DWN DAVID LI 07MAY2015
CHK CHRIS WANG 07MAY2015
APVD XU XIANG 07MAY2015
PRODUCT SPEC 108-137010
APPLICATION SPEC 114-137010
WEIGHT -

TE Connectivity

NAME HI6A-TSH-PG/M

SIZE	CAGE CODE	DRAWING NO	RESTRICTED TO
A3	-	C-TI339160IXXX00	-

CUSTOMER DRAWING

SCALE 1:1 SHEET 1 OF 1 REV A

1470-19 (3/13)