Alle Rechte vorbehalten/ *All rights reserved*

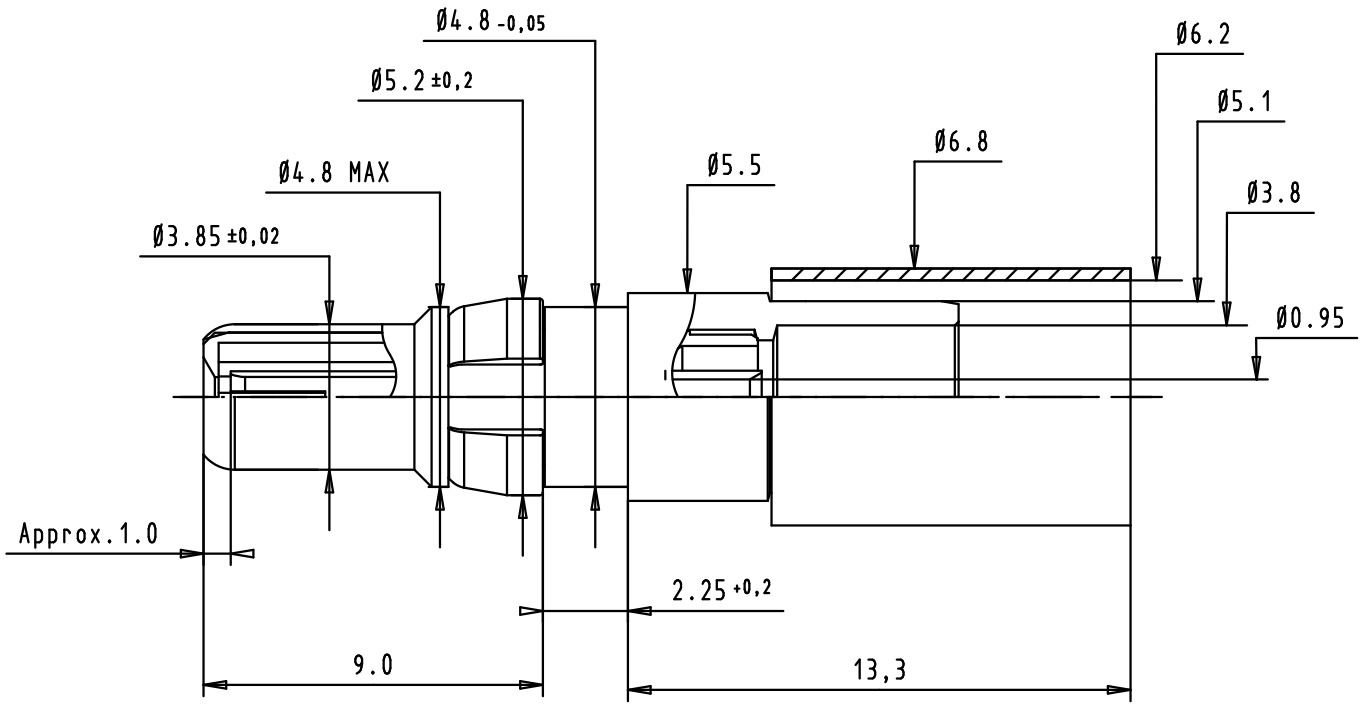

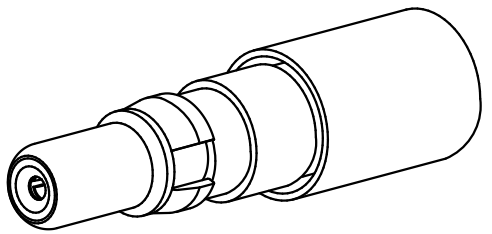

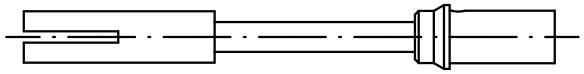

Cable trimming dimensions

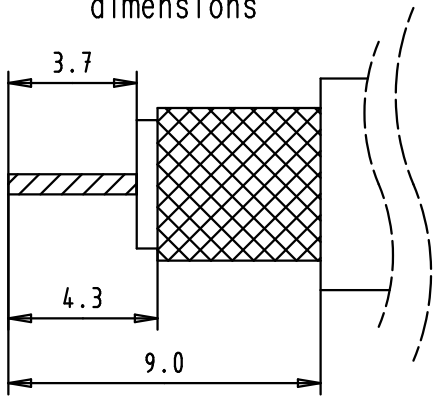

Crimping tool for outer conductor:
hand tool: 09 99 000 0503
die: 09 99 000 0508 cavity B

Crimping tool for inner conductor:
hand tool: 09 99 000 0501
locator: 09 99 000 0507

with cables:	AWG 24
tool selections:	5

All Dimensions in mm
Original Size DIN A 4

Techn. Character.

Nicht tolerierte Maße/ *Free size tolerances*

	Dat.	Name	Maßstab/*Scale*
Detail.	16-09-11	SD	5 : 1
Insp.	16-09-11	BD	
Stand.			

Mod.	Dat.	Name
EC03797	16-09-11	SD

HARTING EURL
F-95972 Paris

male coaxial contact 75 ohms
cable terminations for d-sub,
inner and outer conductors

TB 09 69 282 x232

Sub.

Blatt/ *page* 1/1