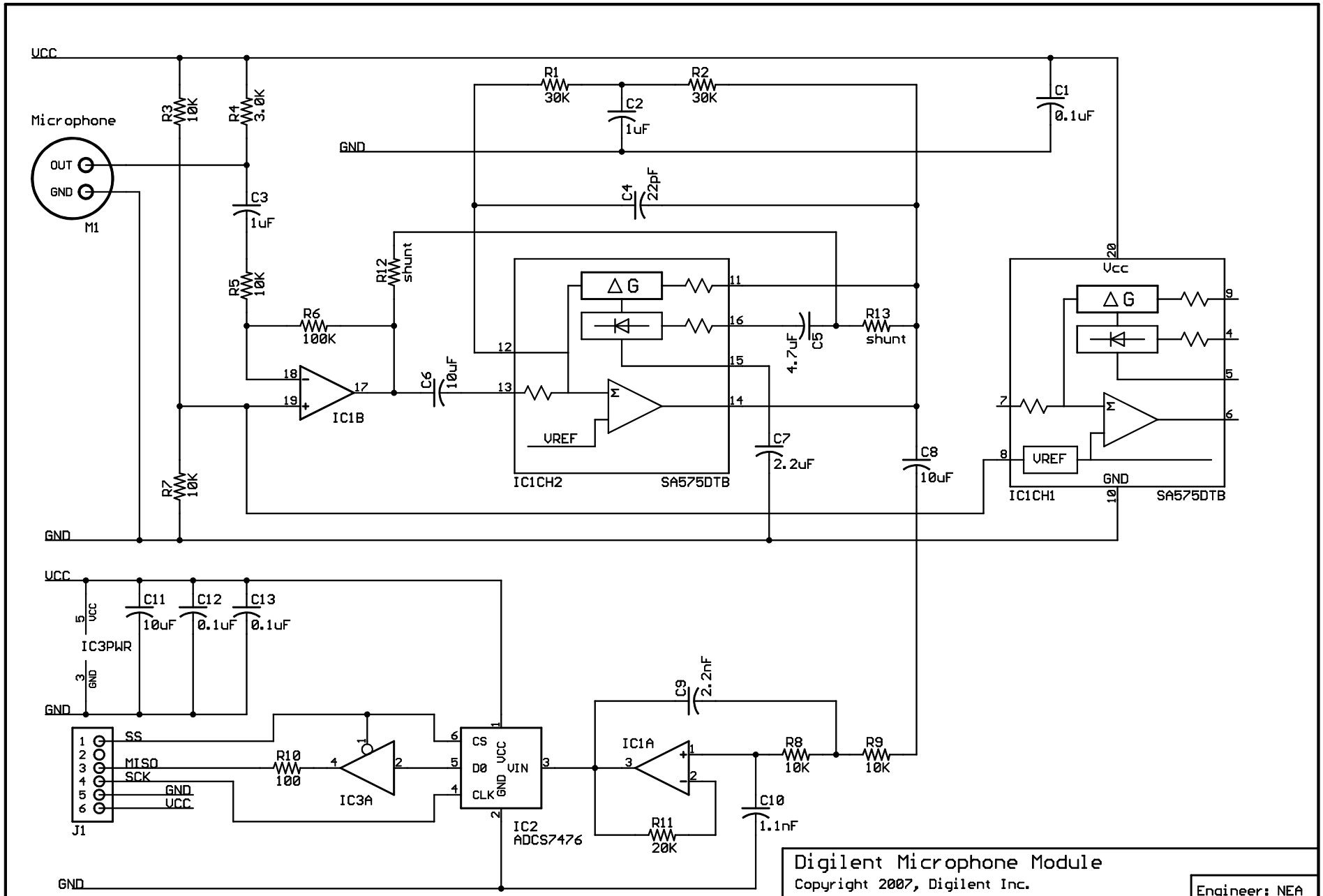

Note 1: For compressor, load R13, no-load R12, no-load C4
For AGC, load R12, load C4, no-load R13

Digilent Inc.

Digilent Microphone Module Copyright 2007, Digilent Inc.	Engineer: NEA
TITLE: PmodMIC	Author: NEA
Document Number: 500-122	Rev: B
Release Date: 08/15/2007	Sheet:1/1