MICRO SWITCH
a Honeywell Division
FED. MFG. CODE 91929

SWITCH - ENCLOSED

CATALOG LISTING
1EN197-6

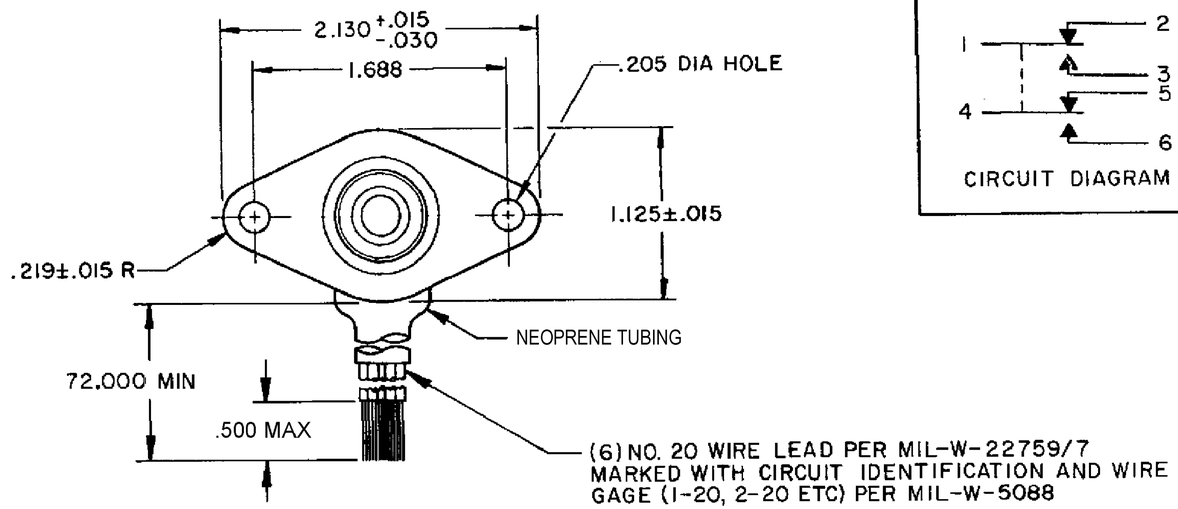

CIRCUIT DIAGRAM

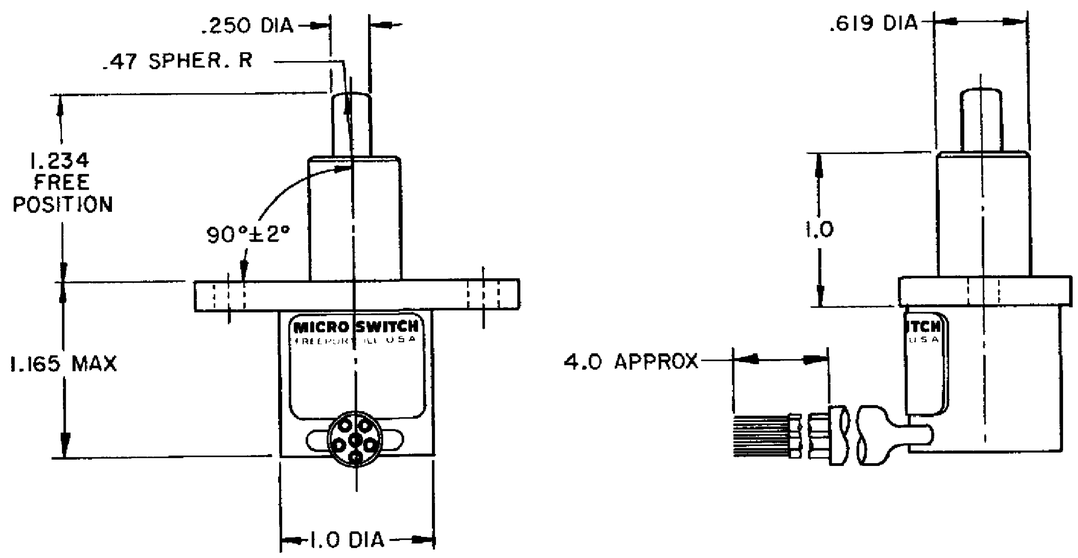

NOTES
1. LIFE RATINGS ARE PER MIL-PRF-8805 REQUIREMENTS. ACTUAL LIFE EXCEEDS RATED LIFE. CONTACT HONEYWELL-MICRO SWITCH FOR ADDITIONAL DATA
2. CIRCUIT DIAGRAM, CAT. LIST., AND DATE CODE ARE SHOWN ON NAMEPLATE
3. CONTACT HONEYWELL-MICRO SWITCH IF ADDITIONAL INFORMATION ON LOW ENERGY LOADS IS REQUIRED OR FOR HELP WITH SPECIFIC APPLICATIONS

SPECIFICATION DETAILS:	
STANDARD.	CONFORMS TO **MS24331-1** (MIL-PRF-8805/40), EXCEPT AS NOTED
CONSTRUCTION:	
ENCLOSURE DESIGN	**RESILIENT** SEAL PER MIL-PRF-8805, SYMBOL 4
CONTACT MATERIAL & CONFIGURATION	SMOOTH **SILVER** CONTACTS
CIRCUIT CONFIGURATION	**2 SPDT**
TERMINATION	LEADWIRES PER MIL-W-22757/7
WEIGHT	12 OZ MAX
EXPOSED METALS	CORROSION RESISTANT STAINLESS STEEL
O-RING MATERIAL:	**SILICONE**
ELECTRICAL CHARACTERISTICS:	

ELECTRICAL RATINGS	LOAD VOLTAGE	INDUCTIVE	RESISTIVE	MOTOR
-SEA LEVEL	28 VDC	2 A	4 A	4 A
-50,000 FEET	28 VDC	2 A	4 A	

DIELECTRIC STRENGTH & INSULATION RES	DIELECTRIC STRENGTH (≈60 Hz FOR 5 SEC)	INSULATION RESISTANCE (500 VDC ± 10%)
-BETWEEN TERMINALS AND EXPOSED NON-CURRENT CARRYING METAL	1000V RMS, 500μ A (MAX LKG)	1000 MEGOHM MIN
-BETWEEN TERMINALS OF MUTUALLY INSULATED CIRCUITS	1000V RMS, 500μ A (MAX LKG)	1000 MEGOHM MIN
-BETWEEN ALL UNCONNECTED TERMINALS OF THE SAME POLE	1000V RMS, 500μ A (MAX LKG)	1000 MEGOHM MIN

SWITCH RESISTANCE	N/A
RECOMMENDATION OR USE IN APPL LESS THAN .5 amps AND/OR 12 volts	NO (3)
MECHANICAL CHARACTERISTICS:	
CHARACTERISTICS:	
COINCIDENCE OPERATING & RELEASING POINTS	**.010 OF PLUNGER TRAVEL**
OPERATING FORCE	6 – 12 LBS
FULL OVERTRAVEL FORCE	**30 LB MAX**
RELEASE FORCE	**4 LB MIN**
PRETRAVEL	**.030±.010**
DIFFERENTIAL TRAVEL	**.020 MAX**
OVERTRAVEL	**.250 MIN**
MOUNTING STRENGTH	**15 IN-LBS**
ACTUATOR STRENGTH	**30 LBS APPLIES IN A DIRECTION TO CAUSE SWITCH ACTUATION**
LIFE:	
MECHENICAL LIFE	25,000 MIN, PER MIL-PRF-8805/40 (1)
ELECTRICAL LIFE AT FULL RATED LOAD	25,000 MIN, PER MIL-PRF-8805/40 (1)
ENVIRONMENTAL:	
TEMPERATURE RANGE	-55°C TO + 85°C
ALTITUDE RANGE	SEA LEVEL TO 50,000 FT
SHOCK	PER MIL-PRF-8805 SYM M-100g
VIBRATION	PER MIL-PRF-8805 SYM 1-10-500 Hz & 10g PEAK
MOISTURE RESISTANCE	PER MIL-PRF-8805
THERMAL SHOCK	PER MIL-PRF-8805
SALT SPRAY	PER MIL-PRF-8805

THIRD ANGLE PROJECTION

SCALE FULL

DO NOT SCALE PRINT

UNLESS OTHERWISE SPECIFIED TOLERANCES ARE

ONE PLACE	(.0)	±.030
TWO PLACE	(.00)	±.015
THREE PLACE	(.000)	±.005
ANGLES		±

WEIGHT **12 OZ MAX**

WARNING– THIS PRODUCT IS SUBJECT TO THE U.S. INTERNATIONAL TRAFFIC IN ARMS REGULATIONS (ITAR), AND THE EXPORT CONTROL LAWS OF THE UNITED STATES. TRANSFER OF TECHNICAL DATA PERTAINING TO THIS PRODUCT BY ANY MEANS TO A FOREIGN PERSON PER ITAR DEFINITIONS. WHETHER IN THE UNITED STATES OR ABROAD, WITHOUT A PRIOR EXPORT LICENSE OR OTHER APPROVAL FROM THE U.S. DEPARTMENT OF STATE, IS PROHIBITED.

CATALOG LISTING 1EN197-6 | PAGE 1 OF 1 | ISSUE 18 | RELEASE NO. SR-11094 | REPLACES

REVISIONS

A	C044351	J A P 15 APR 79	07 JUN 04
B	C051725D	C J H 11 JAN 83	
C	C057370	J A S 13 MAY 85	AK
D	C083237	D L T 18 NOV 96	
E	0000983	JLH 18AUG03	19 APR 79
F	0005785	BM 07JUN04	
G	0006651	TCC-AP 27 AUG 04	
H	0015700	DDS-AP 06 OCT 05	C E B
J	0068954	VKR 06SEP10	

CHECK | DRAWN J A P 15 APR 79 | RASTER