PART NUMBER	ENGINEERING NUMBER
1300680079	TC40C40-200

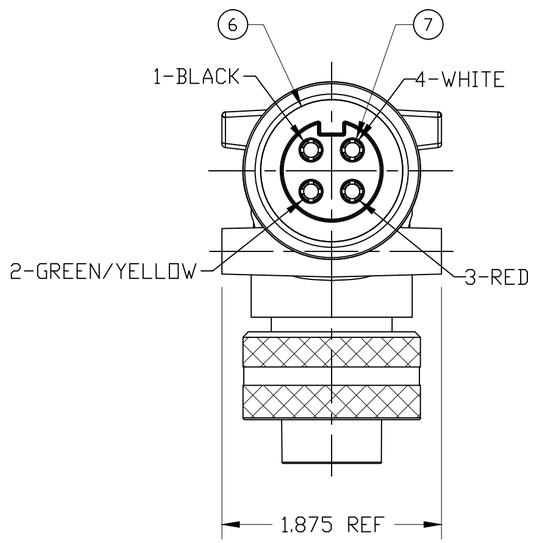

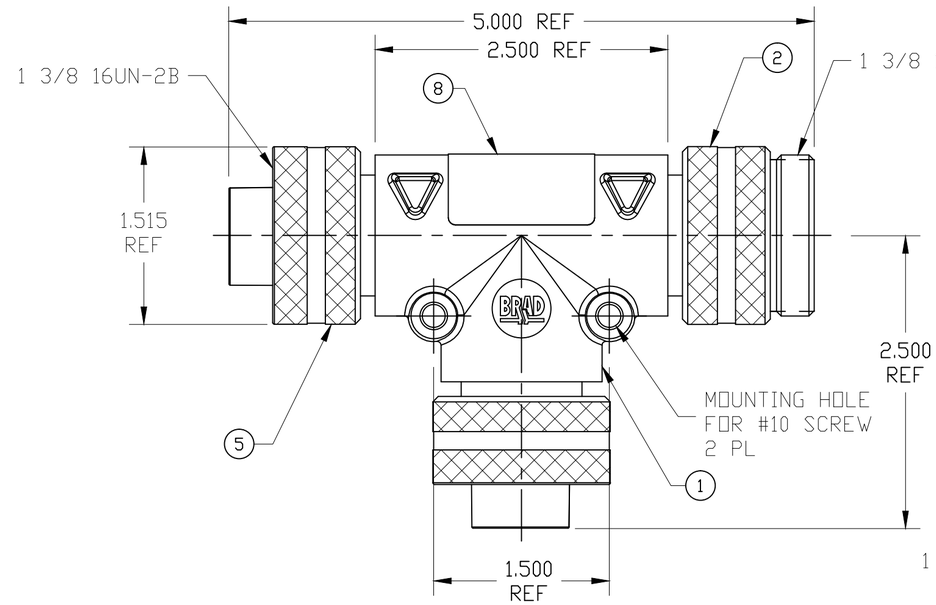

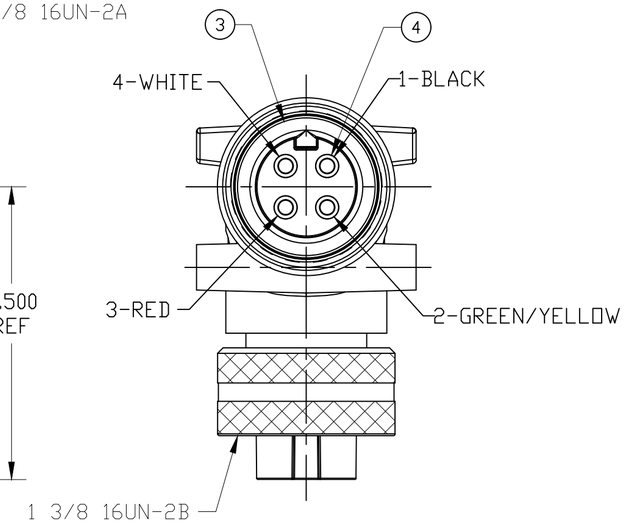

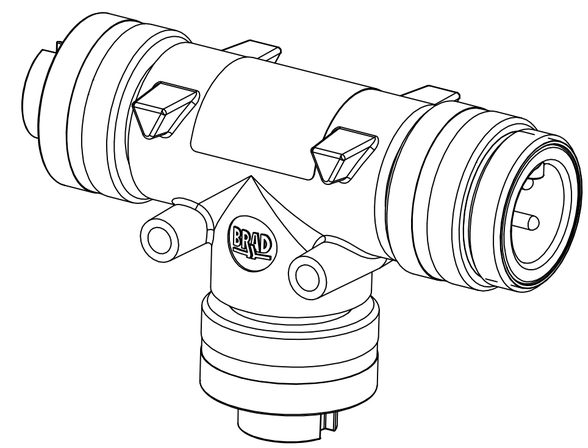

NOTE:

1) LABEL IS MARKED WITH P/N, DATE CODE, VOLTAGE & AMPERAGE

2) ELECTRICAL DATA:
TEE QC TO QC
POLES: 4
MAX. VOLTAGE: 600V AC/DC
MAX. THRU CURRENT: 32A
MAX. DROP CURRENT: 32A
PROTECTION: IP67
TEMPERATURE RANGE: -20°C TO 90°C

3) PACKAGING:
ASSEMBLIES ARE BAGGED SEPERATELY IN POLY BAGS WITH BAR CODE LABEL ATTACHED TO THE OUTSIDE OF THE BAG.

4) ASSEMBLY IS RoHS COMPLIANT

5) CERTIFICATION:
UL LISTED/CSA CERTIFIED , FILE E258922

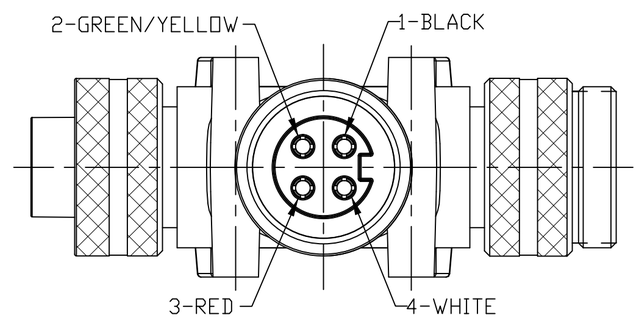

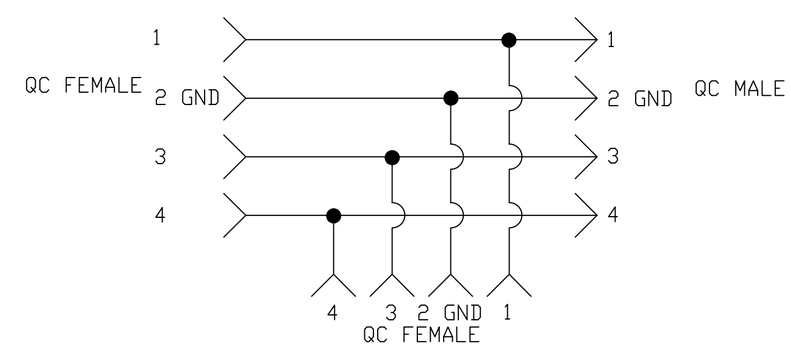

WIRE DIAGRAM

ITEM	QTY	DESCRIPTION	MATERIAL	FINISH
8	1	LABEL	PLASTIC FILM	BLACK/YELLOW
7	8	QC SOCKET CONTACT	COPPER ALLOY	GOLD PLATED
6	2	QC FEMALE INSERT	PVC	BLACK
5	2	QC FEMALE COUPLING NUT	ALUMINUM	CLEAR ANODIZE
4	4	QC PIN CONTACT	COPPER ALLOY	GOLD PLATED
3	1	QC MALE INSERT	PVC	BLACK
2	1	QC MALE COUPLING NUT	ALUMINUM	CLEAR ANODIZE
1	1	OVERMOLD	PVC	GRAY

REV	DESCRIPTION
B	REVISED NOTES EC NO: IPG2015-1959 DRWN: GGUSTAFS 2015/05/13 CH'KD: BARDEN 2015/06/30 APPR: BWOODMAN 2010/01/15

QUALITY SYMBOL
▼=0
(C)=0

GENERAL TOLERANCES (UNLESS SPECIFIED)

	mm	INCH
4 PLACES	±---	±---
3 PLACES	±---	±.005
2 PLACES	±0.13	±.010
1 PLACE	±0.25	±.020
ANGULAR ±1/2°		

DRAFT WHERE APPLICABLE MUST REMAIN WITHIN DIMENSIONS

DIMENSION STYLE: IN/MM
SCALE: 1:1
DESIGN UNITS: INCH
THIRD ANGLE PROJECTION

DRAWN BY: KJOZWIK DATE: 2010/01/14
CHECKED BY: BWOODMAN DATE: 2010/01/14
APPROVED BY: JFMURPHY DATE: 2010/01/15

TITLE: BRAD POWER QC 4 POLE TEE W/4 POLE QC DROP

molex MOLEX INCORPORATED

MATERIAL NO.: SEE TABLE
DOCUMENT NO.: SD-130068-010
SHEET NO.: 1 0F 1
SIZE: C

THIS DRAWING CONTAINS INFORMATION THAT IS PROPRIETARY TO MOLEX INCORPORATED AND SHOULD NOT BE USED WITHOUT WRITTEN PERMISSION