REVISIONS		
LTR	DESCRIPTION	DATE
A	INITIAL RELEASEE	

09.7.10

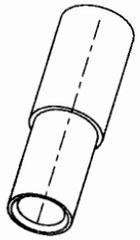

SCALE 2.000

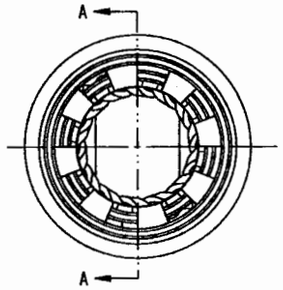

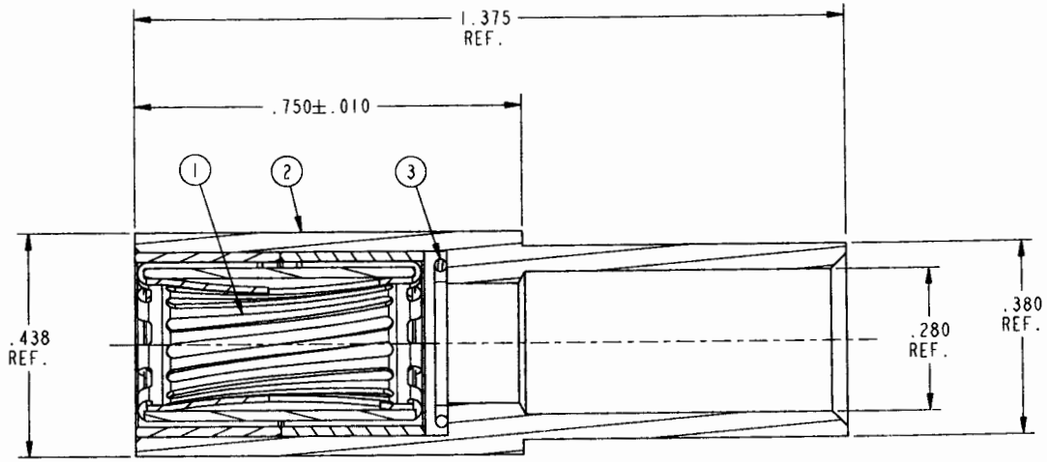

SECTION A-A

ORIGINAL COPY (正宗原版)
13 JUL 2009
DOCUMENT CONTROL

2. ALL COMPOMENTS ARE PLATED BEFORE ASSEMBLY.

1. ALL MATERIAL SHALL BE CERTIFIED COMPLIANT TO THE 2002/95/EC RoHS DIRECTIVE AS AMENDED PER 2005/618/EC.

NOTES:

POS	QTY	PART NUMBER	DESCRIPTION	NOTE
3	1	10-647168-000	5.7MM SURLOK CLIP	
2	1	10-665610-001	5.7MM RADSOK HOLDER BODY	
1	1	10-639161-001	5.7MM RADSOK	

PARTS LIST

APPROVALS		DATE
PREPARED BY	N. UPPLEGER	
ENGINEER IN CHARGE	N. UPPLEGER	26-feb-09
DESIGN MANAGER	S. FITZGERALD	
DESIGN ACTIVITY GROUP	C&I	

THIRD ANGLE PROJECTION

AMPHENOL CORPORATION
40-60 DELAWARE AVENUE
BERRY, KY. 0000

5.7MM SURLOK ASSEMBLY

SIZE	CAGE CODE	DOCUMENT NO.	REV.
C	77820	10-665611-000	A

SCALE: 6.0 | REF. | SHEET 1 OF 1

UNLESS OTHERWISE SPECIFIED

LINEAR DIMENSIONS ARE IN INCHES
TOLERANCES:
.XXXX = ±.0005 ANGLES= ±2°
.XXX = ±.010
.XX = ±.03
.X = ±.1

DIM.& TOL. PER ASME Y14.5M;
DRM PER MIL-DTL-31000;
OTHER Amphenol Stds. PER 9-3800
LEGENDS:
:FLAG NOTE CALL OUT
REFERENCE ONLY

SPECIFICATIONS	
MATERIAL SPEC.	-
	-
	-
	-
PROCESS SPEC.	-
	-
	-
	-

PRO/ENGINEER INFORMATION
Pro/e Model Used:
10-665611.ASSEM
Drawing Name:
10-665611

N/A
NEXT ASSEMBLY

THE USE OF THIS DOCUMENT IS UNLIMITED. HOWEVER, DOCUMENTS REFERENCED HEREON MAY CONTAIN LIMITED RIGHTS DATA.

DOCUMENT NO.	SHEET 1 OF 1	REV.
10-665611-000		A

FORMAT: C-B.E-1

10-665611-000 SHEET 1 OF 1 A