Jul.1.2019 Copyright 2019 HIROSE ELECTRIC CO., LTD. All Rights Reserved.
In case of consideration for using Automotive equipment / device which demand high reliability, kindly contact our sales window correspondents.

	COUNT	DESCRIPTION OF REVISIONS	BY	CHKD	DATE		COUNT	DESCRIPTION OF REVISIONS	BY	CHKD	DATE
△					. .	△					. .
△					. .	△					. .
△					. .	△					. .

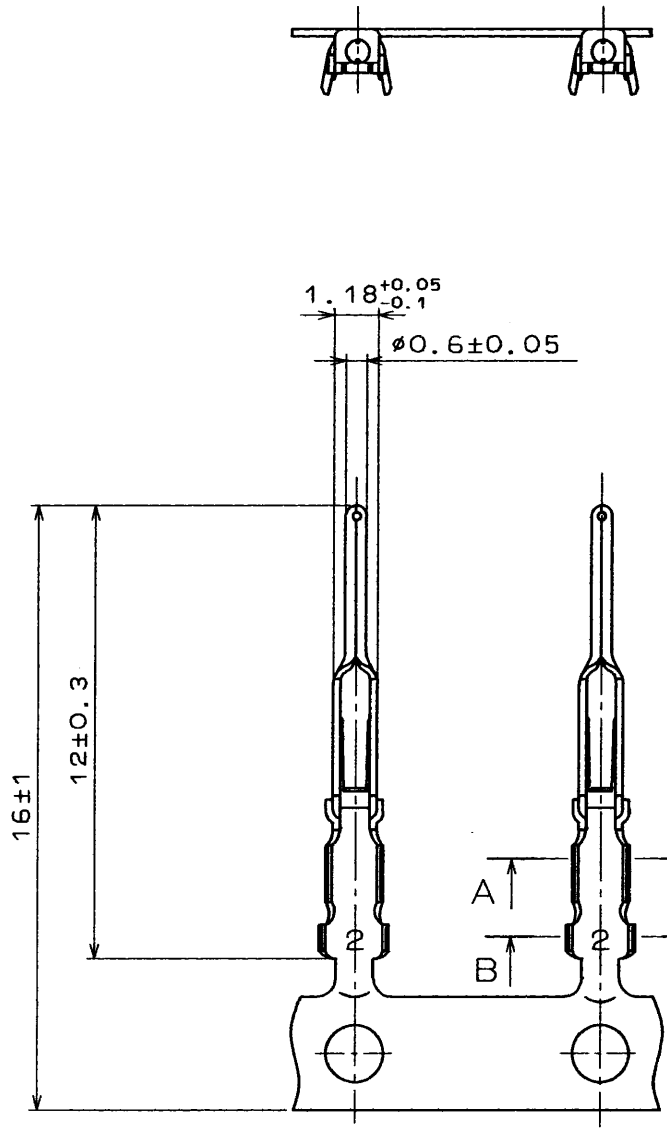

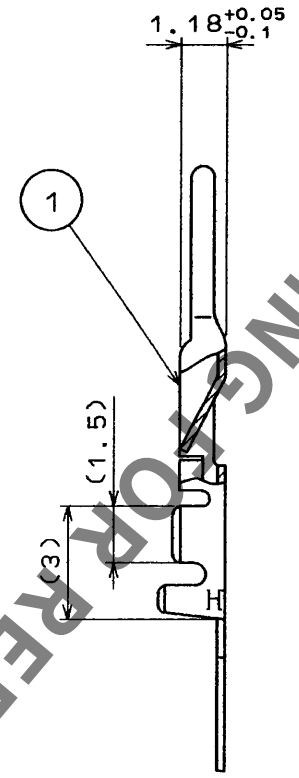

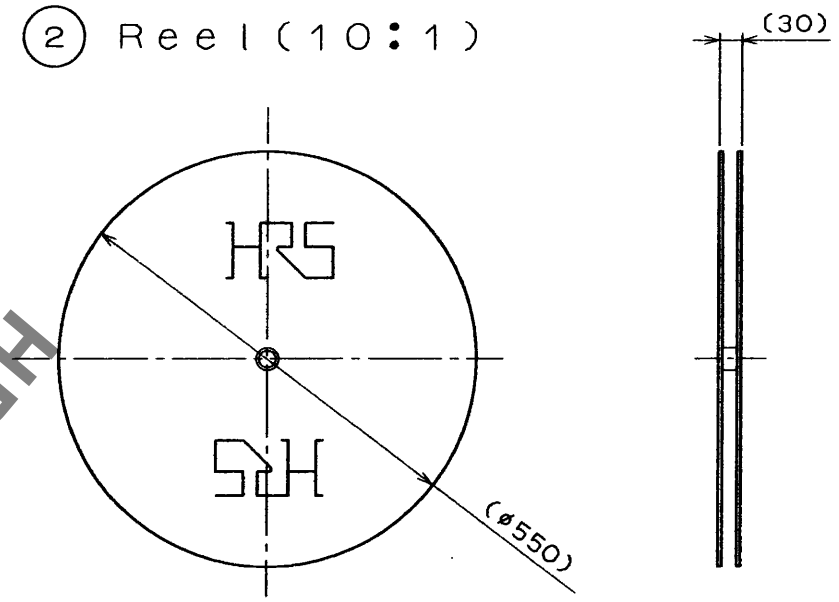

A – A

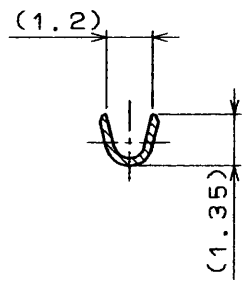

B – B

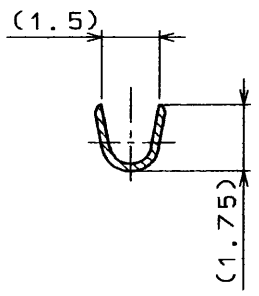

Note 1 Applicable wire
: AWG#24~30(Insulation Dia 1.15 Max).
2 1 Reel : 10000 Contacts.

FOR REFERENCE
HRS DRAWING

NO.	MATERIAL	FINISH , REMARKS	NO.	MATERIAL	FINISH , REMARKS
1	Phosphor bronze	Selective gold plating	2	Carton	(Reel)

CODE NO. (OLD)	DRAWN	DESIGNED	CHECKED	APPROVED	RELEASED
	J.Kaneko 94.6.27	J.Kaneko 94.6.27	. .	M.Yoshida 94.7.9	

SCALE 5 : 1	DRAWING NO. EDC3-047179	PART NO. RP19-PC-221
UNITS mm	HIROSE ELECTRIC CO., LTD.	CODE NO. CL113-1039-6 1/1

TO
R

FORM No.229