THIS DRAWING IS UNPUBLISHED. RELEASED FOR PUBLICATION 20
© COPYRIGHT 20 BY - ALL RIGHTS RESERVED.

REVISIONS

P	LTR	DESCRIPTION	DATE	DWN	APVD
	K2	REVISED PER ECR-17-017609	04DEC2017	JB	DZ

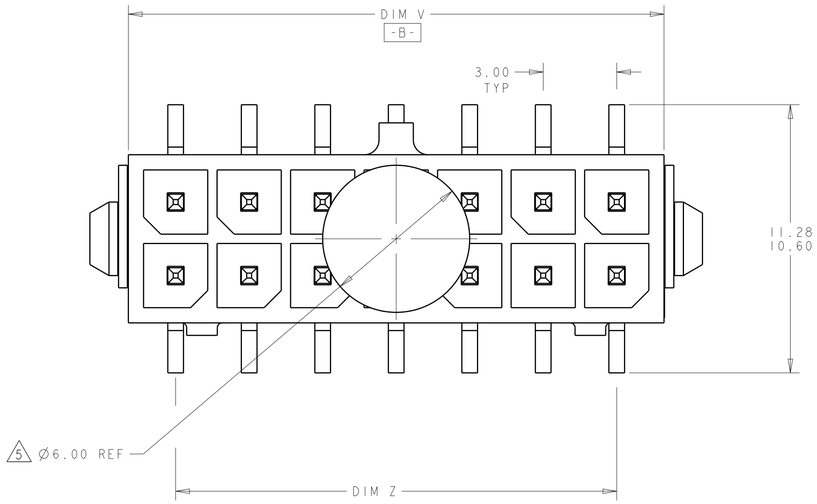

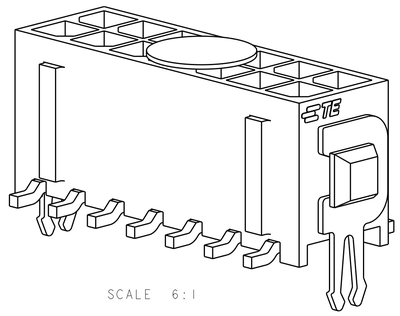

1. MATERIAL;
   CONTACTS - BRASS.
   HOUSING - UL 94V-0 RATED HIGH TEMP NYLON, COLOR; BLACK.
   HOLDDOWNS - PHOSPHOR BRONZE.
2. PLATING;
   CONTACTS - 0.76µm MINIMUM GOLD OVER 2.54µm MINIMUM NICKEL ON MATING AREA. 2.54µm TIN-LEAD MINIMUM OVER 2.54µm MINIMUM ON SOLDER TAILS.
   HOLDOWNS - 2.54µm TIN-LEAD.
4. RECOMMENDED PC BOARD THICKNESS OF 1.57.
5. KAPTON VACUUM PICK UP BUTTON.
6. DIMENSION APPLIES TO SOLDERTAIL SURFACES AND STANDOFF SURFACES.
7. ALL SOLDERTAILS.
8. PLATING;
   CONTACTS - 0.76µm MINIMUM GOLD OVER 2.54µm MINIMUM NICKEL ON MATING AREA. 2.54µm MATTE TIN MINIMUM OVER 2.54µm MINIMUM ON SOLDER TAILS.
   HOLDOWNS - 2.54µm MATTE TIN.

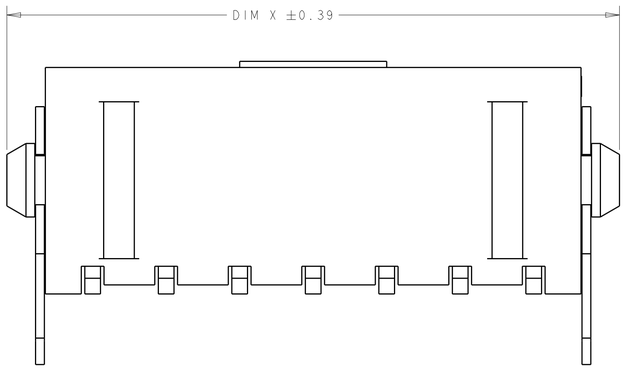

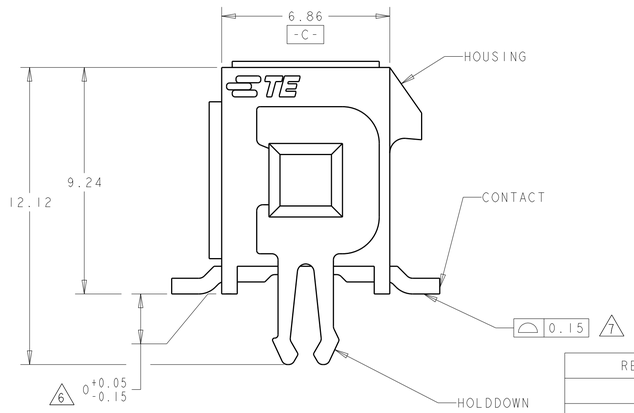

UNREEL DIRECTION
OF REVERSE TAPED

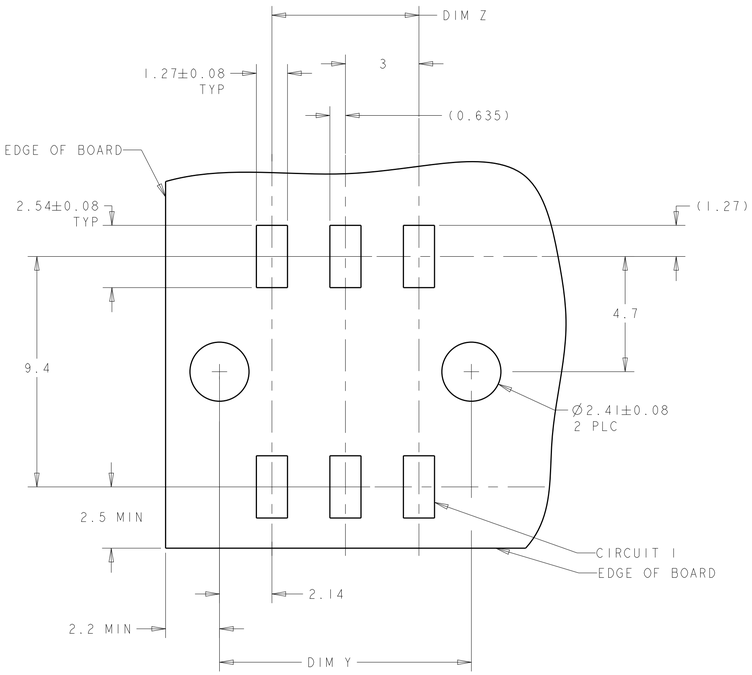

RECOMMENDED PCB LAYOUT (COMPONENT SIDE) 4

	PACKAGING	FINISH	DIM V	DIM Y	DIM Z	DIM X	NO. OF POSN.	PART NUMBER
	REVERSE TAPED	8	21.86	22.30	18.00	25.00	14	7-794635-4
	TAPED	8	36.86	37.30	33.00	40.00	24	5-794635-4
	TAPED	8	33.86	34.30	30.00	37.00	22	5-794635-2
	TAPED	8	30.86	31.30	27.00	34.00	20	5-794635-0
	TAPED	8	27.86	28.30	24.00	31.00	18	4-794635-8
	TAPED	8	24.86	25.30	21.00	28.00	16	4-794635-6
	TAPED	8	21.86	22.30	18.00	25.00	14	4-794635-4
	TAPED	8	18.86	19.30	15.00	22.00	12	4-794635-2
	TAPED	8	15.86	16.30	12.00	19.00	10	4-794635-0
	TAPED	8	12.86	13.30	9.00	16.00	8	3-794635-8
	TAPED	8	9.86	10.30	6.00	13.00	6	3-794635-6
	TAPED	8	6.86	7.30	3.00	10.00	4	3-794635-4
	LOOSE PIECE	8	3.86	4.30	-	7.00	2	3-794635-2
SUPERSEDED BY 5-794635-4	TAPED	2	36.86	37.30	33.00	40.00	24	~~2-794635-4~~
SUPERSEDED BY 5-794635-2	TAPED	2	33.86	34.30	30.00	37.00	22	~~2-794635-2~~
SUPERSEDED BY 5-794635-0	TAPED	2	30.86	31.30	27.00	34.00	20	~~2-794635-0~~
SUPERSEDED BY 4-794635-8	TAPED	2	27.86	28.30	24.00	31.00	18	~~1-794635-8~~
SUPERSEDED BY 4-794635-6	TAPED	2	24.86	25.30	21.00	28.00	16	~~1-794635-6~~
SUPERSEDED BY 4-794635-4	TAPED	2	21.86	22.30	18.00	25.00	14	~~1-794635-4~~
SUPERSEDED BY 4-794635-2	TAPED	2	18.86	19.30	15.00	22.00	12	~~1-794635-2~~
SUPERSEDED BY 4-794635-0	TAPED	2	15.86	16.30	12.00	19.00	10	~~1-794635-0~~
SUPERSEDED BY 3-794635-8	TAPED	2	12.86	13.30	9.00	16.00	8	~~794635-8~~
SUPERSEDED BY 3-794635-6	TAPED	2	9.86	10.30	6.00	13.00	6	~~794635-6~~
SUPERSEDED BY 3-794635-4	TAPED	2	6.86	7.30	3.00	10.00	4	~~794635-4~~
SUPERSEDED BY 3-794635-2	LOOSE PIECE	2	3.86	4.30	-	7.00	2	~~794635-2~~

THIS DRAWING IS A CONTROLLED DOCUMENT.

DIMENSIONS: mm

TOLERANCES UNLESS OTHERWISE SPECIFIED:
0 PLC ±-
1 PLC ±-
2 PLC ±0.13
3 PLC ±-
4 PLC ±-
ANGLES ±-

MATERIAL 1 -

FINISH - SEE TABLE

DWN 19-MAR-2003 K. WHITAKER
CHK 19-MAR-2003 C. JONES
APVD 19-MAR-2003 C. JONES
PRODUCT SPEC -
APPLICATION SPEC -
WEIGHT -

TE Connectivity

NAME SURFACE MOUNT, VERTICAL, MECHANICAL HOLDDOWN, ASSEMBLY, 30 GOLD HEADER, DUAL ROW, MICRO MATE-N-LOK(TM)

SIZE A1 | CAGE CODE 00779 | DRAWING NO C-794635 | RESTRICTED TO -

CUSTOMER DRAWING | SCALE 8:1 | SHEET 1 OF 1 | REV K2

4805 (3/13)