Alle Rechte vorbehalten/ *All rights reserved*

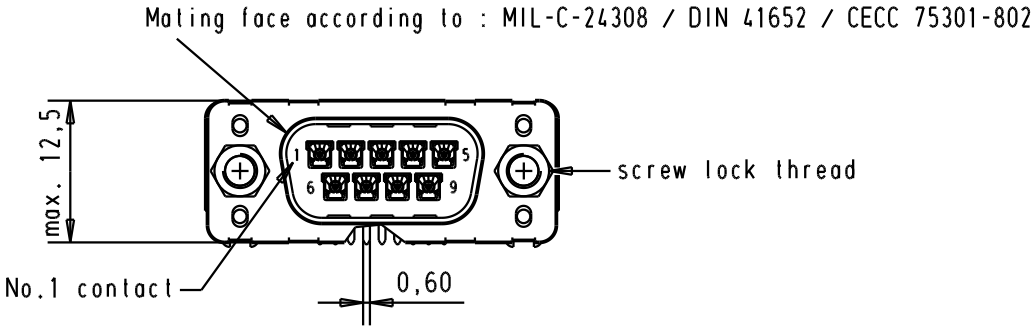

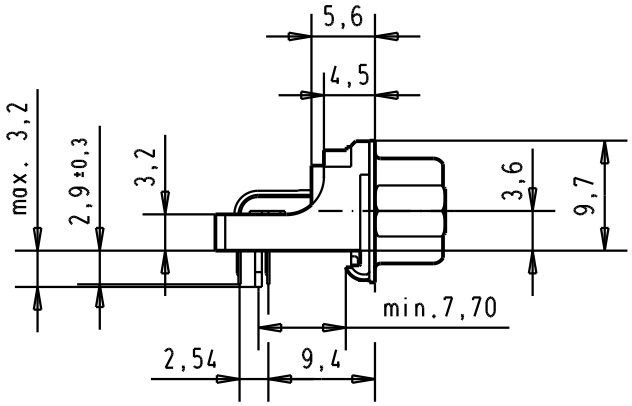

Printed board layout
component side

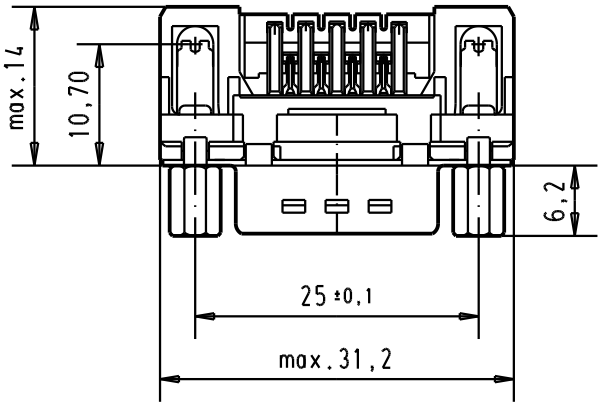

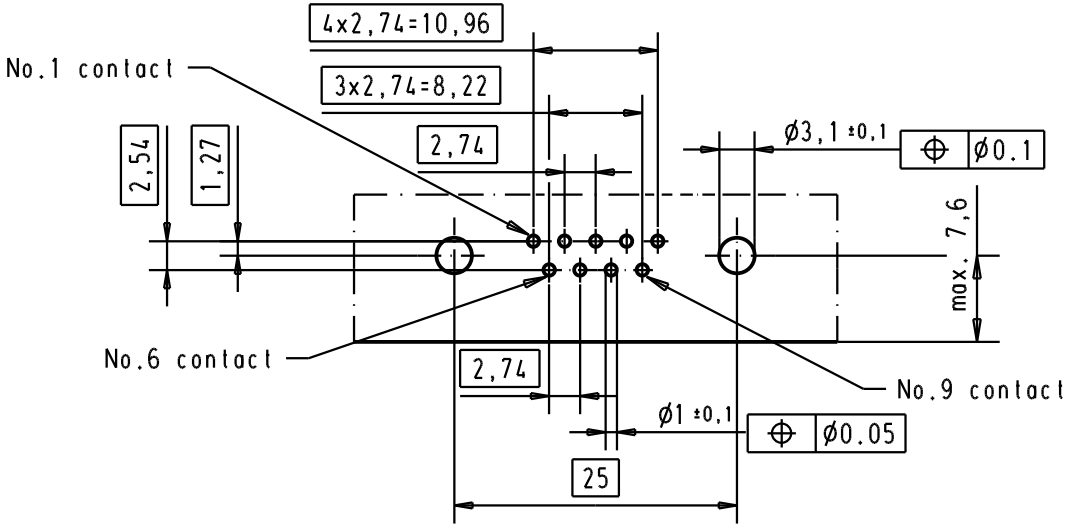

Connector retention and assembling forces on the PCB = 25 / 80 newtons

Part number	Screw lock thread	Performance level	Mod.	Dat.	Name
09 65 166 3817	4-40 UNC	1	31892	22/04/04	JH
09 65 166 6817	4-40 UNC	2	31084	04/09/02	YT
09 65 166 7817	4-40 UNC	3	29723	05/03/02	CV

	Dat.	Name
Detail.	05/03/02	CV
Insp.		
Stand.		

All Dim. in mm
Orig. Size DIN A 4

D-Sub, high temperature, male, low profil, 09 poles, with solder pins 2.9, screw lock and grounding board lock.

Maßstab/ *Scale* 1.5:1

HARTING EURL
F-95972 Paris

TB 0965166x81x

Sub.

Blatt/ *Page* 5