THIS DRAWING IS UNPUBLISHED. RELEASED FOR PUBLICATION -, .
© COPYRIGHT By - ALL RIGHTS RESERVED.

| LOC | DIST |
|---|---|
| CM | 00 |

REVISIONS

| P | LTR | DESCRIPTION | DATE | DWN | APVD |
|---|---|---|---|---|---|
| | M2 | REVISED PER ECR-12-011660 | 25JAN13 | KH | TM |

1 PARTS MUST COMPLY WITH AMP SOLDERABLITY SPEC 109-11-3.

2 CONTACT IS STAMPED FROM PRE-PLATED STOCK WHICH IS PLATED OVERALL WITH 0.00127 [.000050] NICKEL, THEN STRIPED WITH 0.00076 [.000030] GOLD IN CONTACT AREA INDICATED AND TIN-LEAD ON SOLDER TAIL END.

3 CIRCUIT IDENTIFICATION CHARACTERS ARE ADJACENT TO THE INDICATED CAVITIES, BUT LOCATION AND ORIENTATION MAY DIFFER FROM PRINT.

4 CONTACT IS PLATED OVERALL WITH 0.00127 [.000050] NICKEL, THEN 0.00076 [.000030] GOLD OVER CONTACT LENGTH INDICATED AND MATTE TIN ON SOLDER TAIL END.

5 SUPERSEDED BY 350827-4

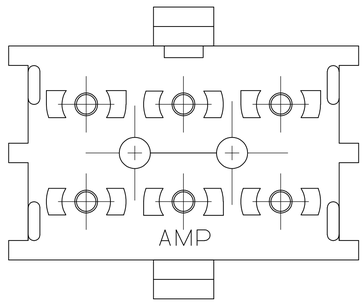


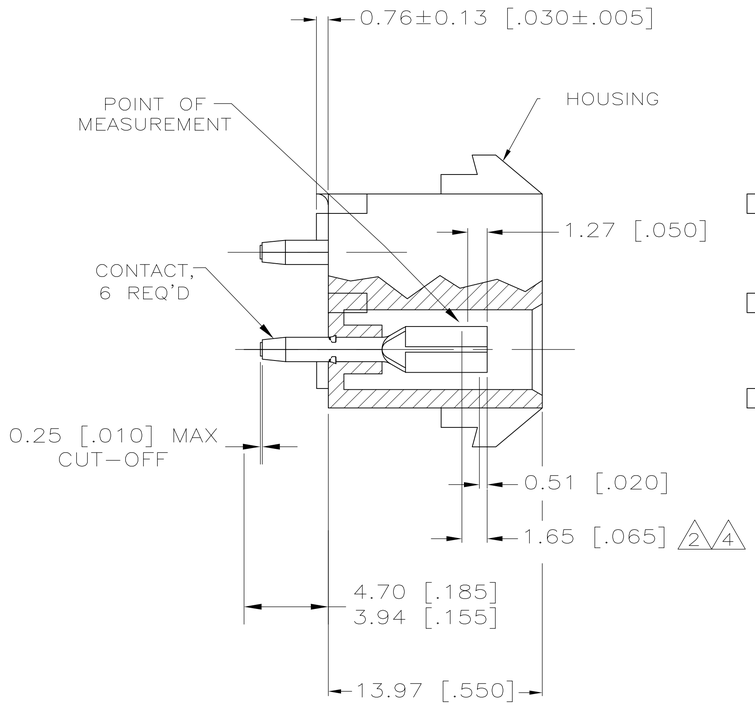


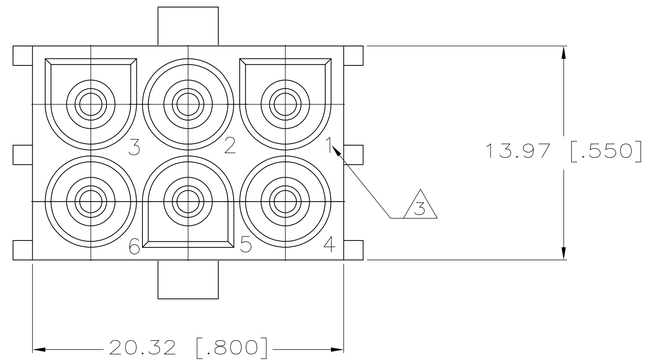


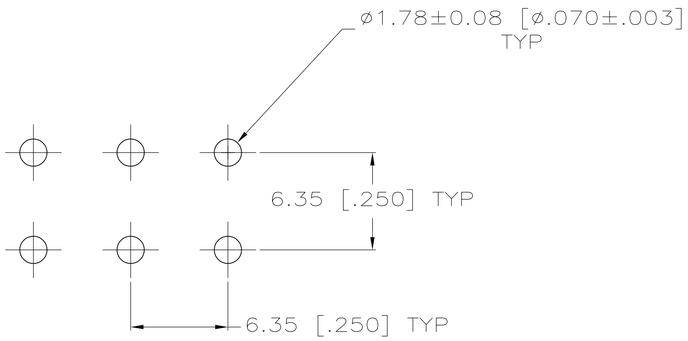


RECOMMENDED LAYOUT FOR 1.58 [.062] THICK PC BOARD

| | CONTACT | HOUSING | PART NO |
|---|---|---|---|
| | PH BRZ GOLD 4 | NYLON,UL 94V-0 | 350827-4 |
| 5 | PH BRZ GOLD 2 | NYLON,UL 94V-0 | 350827-2 |
| | PH BRZ TIN | NYLON,UL 94V-0 | 350827-1 |

THIS DRAWING IS A CONTROLLED DOCUMENT.

DIMENSIONS: mm [INCHES]

TOLERANCES UNLESS OTHERWISE SPECIFIED:
0 PLC ±
1 PLC ±
2 PLC ±
3 PLC ± 0.13 [.005]
4 PLC ±
ANGLES ±

MATERIAL: SEE TABLE
FINISH: SEE TABLE

DWN K. WHITAKER 110CT2005
CHK S. RIDGILL 110CT2005
APVD S. RIDGILL 110CT2005
PRODUCT SPEC
APPLICATION SPEC —
WEIGHT

TE Connectivity

NAME: 6 CIRCUIT UNIVERSAL MATE-N-LOK (TM) P.C. BOARD SOCKET HEADER ASSEMBLY

| SIZE | CAGE CODE | DRAWING NO | RESTRICTED TO |
|---|---|---|---|
| A1 | 00779 | C-350827 | |

CUSTOMER DRAWING | SCALE 5:1 | SHEET 1 OF 1 | REV M2

4805 (3/11)