THIS DRAWING IS UNPUBLISHED. RELEASED FOR PUBLICATION 20
© COPYRIGHT 20 - ALL RIGHTS RESERVED.

REVISIONS

P	LTR	DESCRIPTION	DATE	DWN	APVD
	J2	REVISED PER ECR-17-017609	04DEC2017	JB	DZ

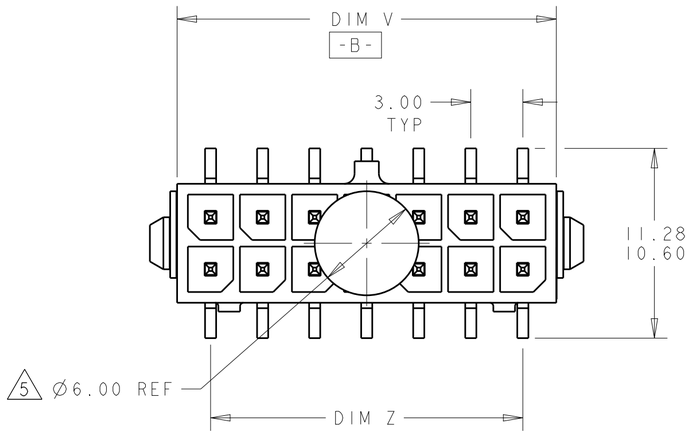

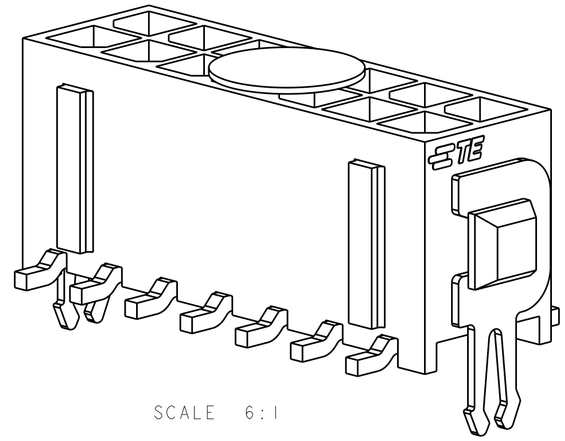

SCALE 6:1

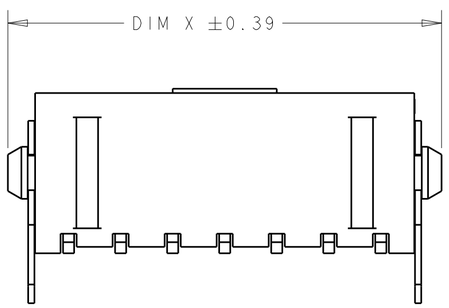

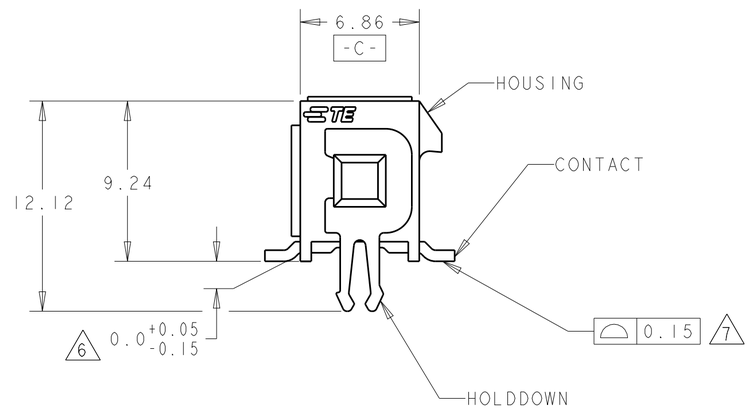

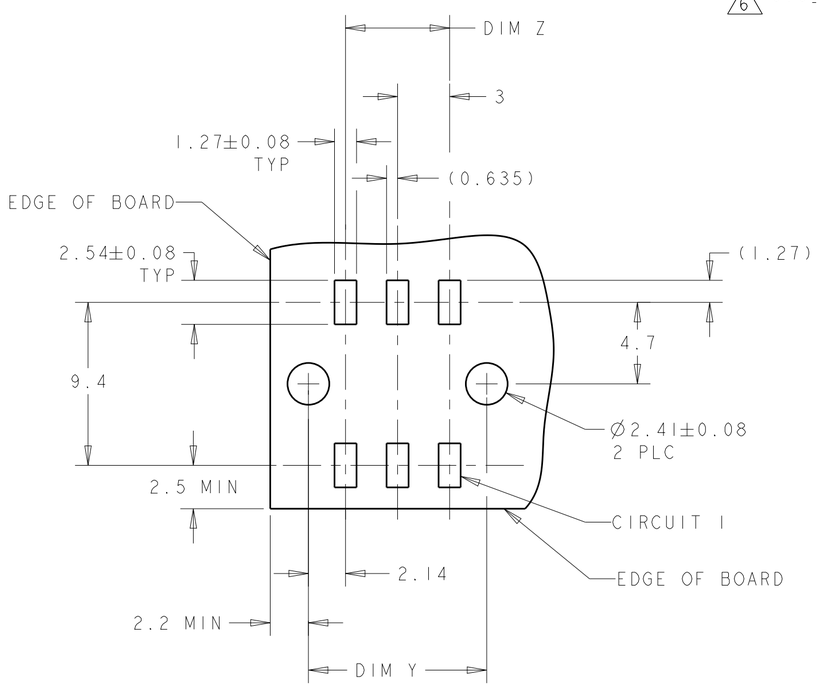

RECOMMENDED PCB LAYOUT 4
(COMPONENT SIDE)

1 MATERIAL:
CONTACTS - BRASS.
HOUSING - UL 94V-0 RATED HIGH TEMP NYLON, COLOR; BLACK.
HOLD DOWNS - PHOSPHOR BRONZE.

2 FINISH:
CONTACTS - 2.54µm MINIMUM TIN-LEAD OVER 0.127µm MINIMUM NICKEL.
HOLD DOWNS - 2.54µm TIN-LEAD.

4 RECOMMENDED PC BOARD THICKNESS OF 1.57.

5 KAPTON VACUUM PICK UP BUTTON.

6 DIMENSION APPLIES TO SOLDERTAIL SURFACES AND STANDOFF SURFACES.

7 ALL SOLDERTAILS.

8 FINISH:
CONTACTS - 2.54µm MINIMUM MATTE TIN OVER 1.27µm MINIMUM NICKEL.
HOLD DOWNS - 2.54µm MATTE TIN.

FINISH	DIM V	DIM Y	DIM Z	DIM X	NO. OF POSN.	ASSEMBLY
8	36.86	37.3	33.00	40.00	24	5-794633-4
	33.86	34.3	30.00	37.00	22	5-794633-2
	30.86	31.3	27.00	34.00	20	5-794633-0
	27.86	28.3	24.00	31.00	18	4-794633-8
	24.86	25.3	21.00	28.00	16	4-794633-6
	21.86	22.3	18.00	25.00	14	4-794633-4
	18.86	19.3	15.00	22.00	12	4-794633-2
	15.86	16.3	12.00	19.00	10	4-794633-0
	12.86	13.3	9.00	16.00	8	3-794633-8
	9.86	10.3	6.00	13.00	6	3-794633-6
	6.86	7.3	3.00	10.00	4	3-794633-4
	3.86	4.3	-	7.00	2	3-794633-2
SUPERSEDED BY 5-794633-4	36.86	37.3	33.00	40.00	24	~~2-794633-4~~
SUPERSEDED BY 5-794633-2	33.86	34.3	30.00	37.00	22	~~2-794633-2~~
SUPERSEDED BY 5-794633-0	30.86	31.3	27.00	34.00	20	~~2-794633-0~~
SUPERSEDED BY 4-794633-8	27.86	28.3	24.00	31.00	18	~~1-794633-8~~
SUPERSEDED BY 4-794633-6	24.86	25.3	21.00	28.00	16	~~1-794633-6~~
SUPERSEDED BY 4-794633-4	21.86	22.3	18.00	25.00	14	~~1-794633-4~~
SUPERSEDED BY 4-794633-2	18.86	19.3	15.00	22.00	12	~~1-794633-2~~
SUPERSEDED BY 4-794633-0	15.86	16.3	12.00	19.00	10	~~1-794633-0~~
SUPERSEDED BY 3-794633-8	12.86	13.3	9.00	16.00	8	~~794633-8~~
SUPERSEDED BY 3-794633-6	9.86	10.3	6.00	13.00	6	~~794633-6~~
SUPERSEDED BY 3-794633-4	6.86	7.3	3.00	10.00	4	~~794633-4~~
SUPERSEDED BY 3-794633-2	3.86	4.3	-	7.00	2	~~794633-2~~

THIS DRAWING IS A CONTROLLED DOCUMENT.

DIMENSIONS: mm

TOLERANCES UNLESS OTHERWISE SPECIFIED:
0 PLC ±
1 PLC ±
2 PLC ±0.13
3 PLC ±
4 PLC ±
ANGLES ±

MATERIAL 1

FINISH SEE TABLE

DWN S. HOOVER 23-MAR-2005
CHK C. JONES 23-MAR-2005
APVD C. JONES 23-MAR-2005

PRODUCT SPEC -
APPLICATION SPEC -
WEIGHT -

TE Connectivity

NAME SURFACE MOUNT, VERTICAL, MECHANICAL HOLD DOWN, ASSEMBLY, TIN HEADER, DUAL ROW, MICRO MATE-N-LOK (TM)

SIZE A2 | CAGE CODE 00779 | DRAWING NO C-794633 | RESTRICTED TO -

CUSTOMER DRAWING | SCALE 4:1 | SHEET 1 OF 1 | REV J2

794633

1471-9 (3/13)