THIS DRAWING IS UNPUBLISHED. RELEASED FOR PUBLICATION -,- .
© COPYRIGHT – TE Connectivity Ltd. ALL RIGHTS RESERVED.

REVISIONS

P	LTR	DESCRIPTION	DATE	DWN	APVD
	B1	REVISED PER ECR-18-001762	15FEB2018	BDA	JB

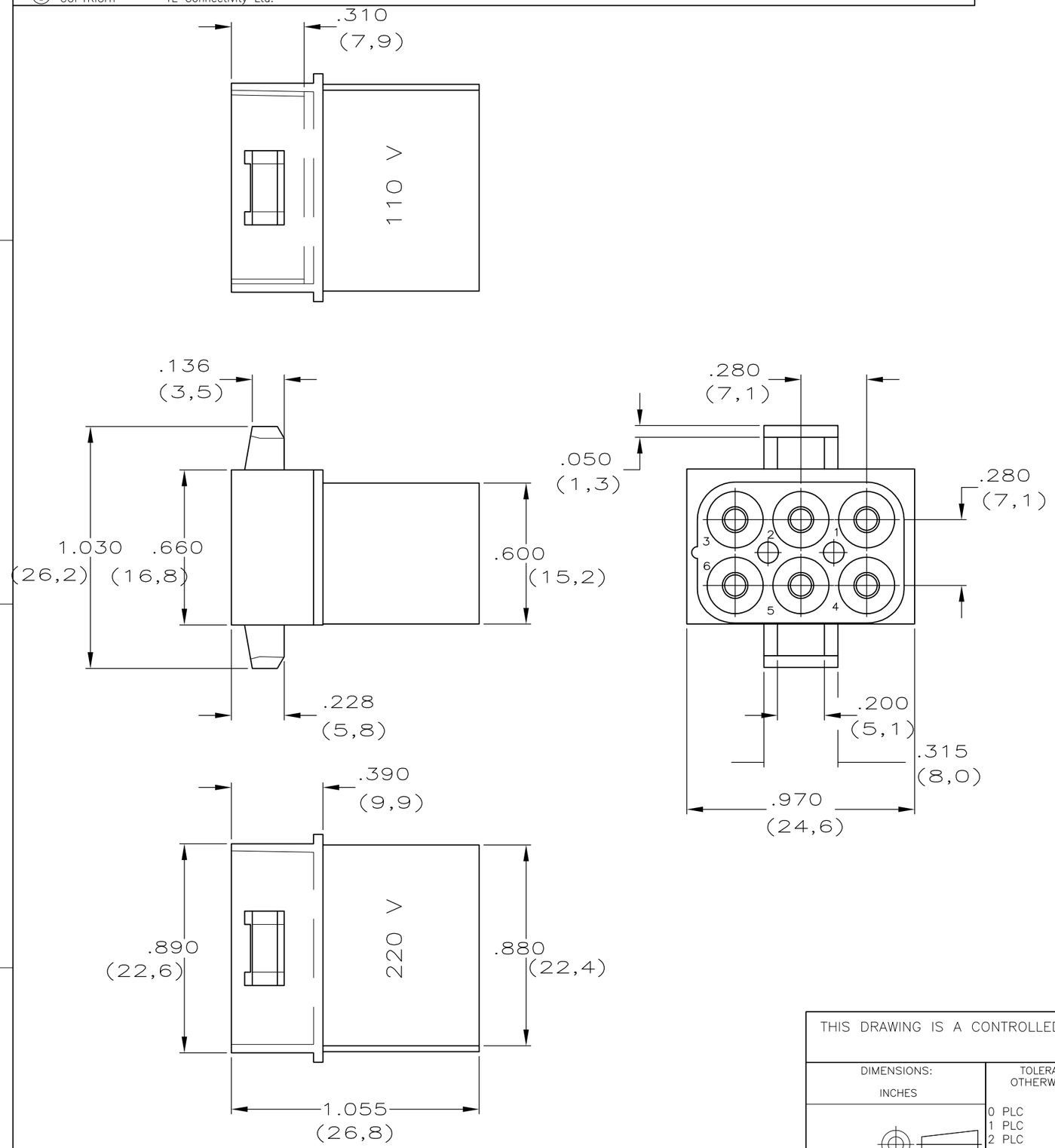

	BLACK	POLYAMIDE 94V-0 PHOSPHOR AND HALOGEN FREE	4-163035-9
	BLACK	–	3-163035-9
	GREY	–	3-163035-8
	VIOLET	–	3-163035-7
	BLUE	–	3-163035-6
	GREEN	POLYAMIDE	3-163035-5
	YELLOW	94V-0	3-163035-4
	ORANGE	–	3-163035-3
	RED	–	3-163035-2
	BROWN	–	3-163035-1
	NATURAL	–	~~3-163035-0~~
OBSOLETE	BLACK	–	~~2-163035-9~~
	GREY	–	~~2-163035-8~~
	VIOLET	POLYAMIDE	~~2-163035-7~~
	BLUE	94V-2	~~2-163035-6~~
	GREEN	WITH	~~2-163035-5~~
	YELLOW	110-220V	~~2-163035-4~~
	ORANGE	–	~~2-163035-3~~
	RED	–	~~2-163035-2~~
	BROWN	–	~~2-163035-1~~
	NATURAL	–	~~2-163035-0~~
OBSOLETE	BLACK	–	1-163035-9
	GREY	–	~~1-163035-8~~
	VIOLET	–	~~1-163035-7~~
	BLUE	POLYAMIDE	~~1-163035-6~~
	GREEN	94V-2	~~1-163035-5~~
	YELLOW	–	~~1-163035-4~~
	ORANGE	–	~~1-163035-3~~
	–	–	–
	BROWN	–	~~1-163035-1~~
	NATURAL	–	1-163035-0
	FINISH	MATERIAL	PARTNUMBER

THIS DRAWING IS A CONTROLLED DOCUMENT.

DIMENSIONS: INCHES

TOLERANCES UNLESS OTHERWISE SPECIFIED:
0 PLC ± –
1 PLC ± –
2 PLC ± –
3 PLC ± –
4 PLC ± –
ANGLES ± –

MATERIAL –
FINISH –

DWN J ELENBAAS 14-11-94
CHK A BIJNEN –
APVD – –
PRODUCT SPEC –
APPLICATION SPEC –
WEIGHT

TE Connectivity Ltd.

NAME
6-CIRCUIT PINHOUSING
MATE-N-LOK

SIZE	CAGE CODE	DRAWING NO	RESTRICTED TO
A3	00779	C-C-163035	–

CUSTOMER DRAWING | SCALE – | SHEET 1 OF 1 | REV B1