THIS DRAWING IS UNPUBLISHED. RELEASED FOR PUBLICATION -,- .
© COPYRIGHT - By - ALL RIGHTS RESERVED.

LOC	DIST
AF	50

REVISIONS

P	LTR	DESCRIPTION	DATE	DWN	APVD
	B	REVISED PER ECR-12-013518	24NOV12	KH	PD

1 CONTINUOUS STRIP ON REELS.

2 WIRE SIZE #20-#16 AWG

3 INSULATION RANGE IS .090-.130 DIA

4 MATING TAB THK IS .020±.001

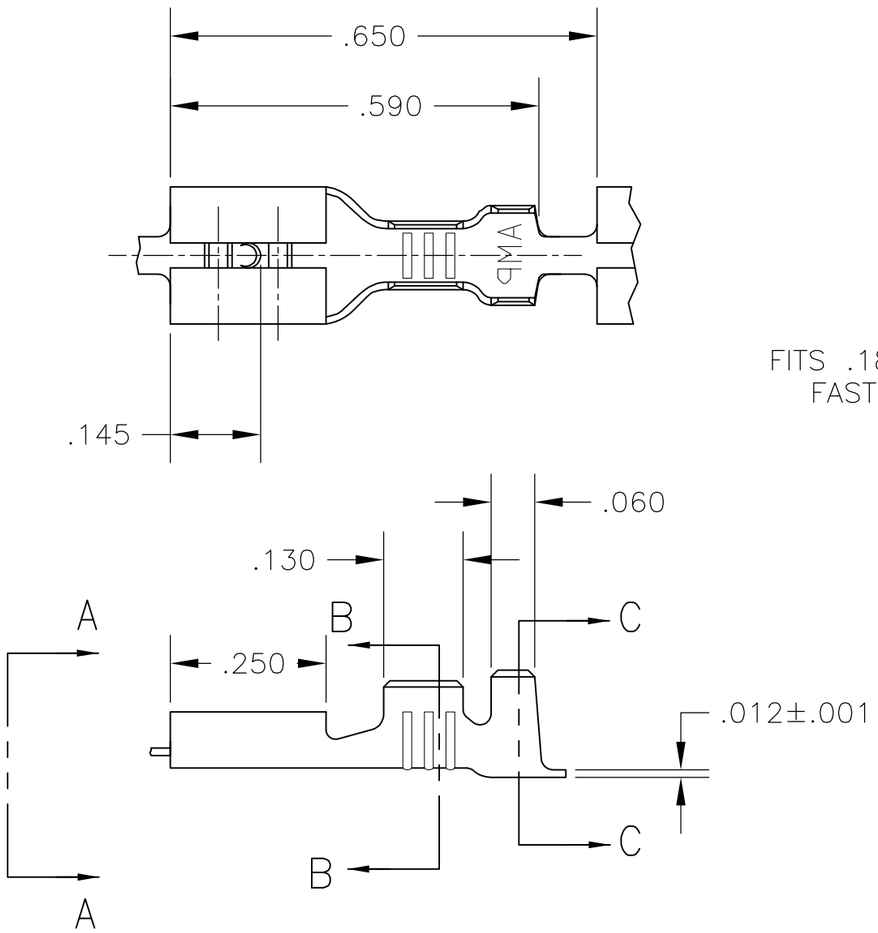

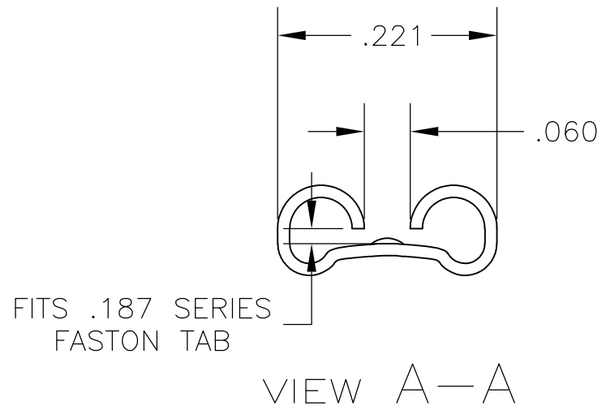

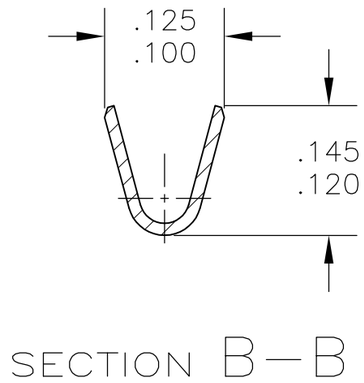

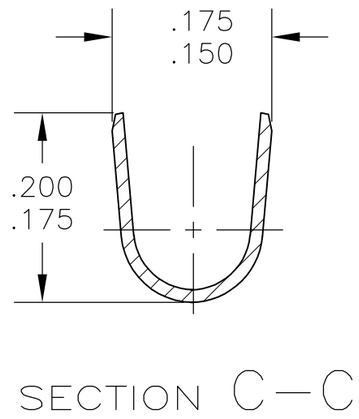

FINISH	MATERIAL	PART NO.
TIN	BRASS	157440-2
--	BRASS	157440-1

THIS DRAWING IS A CONTROLLED DOCUMENT.

DIMENSIONS: INCHES

TOLERANCES UNLESS OTHERWISE SPECIFIED:

0 PLC	± -
1 PLC	± -
2 PLC	± -
3 PLC	± .015
4 PLC	± -
ANGLES	± -

MATERIAL: SEE ABOVE

FINISH: SEE ABOVE

DWN	JR RUTH	21JAN09
CHK	P DESANTIS	21JAN09
APVD	P DESANTIS	21JAN09
PRODUCT SPEC	—	
APPLICATION SPEC	—	
WEIGHT	—	

TE Connectivity

NAME: RECEPTACLE, FASTON, .187 SERIES —

SIZE	CAGE CODE	DRAWING NO	RESTRICTED TO
A3	00779	C-157440	—

CUSTOMER DRAWING

SCALE	SHEET	REV
NTS	1 OF 1	B