Alle Rechte vorbehalten/ *All rights reserved*

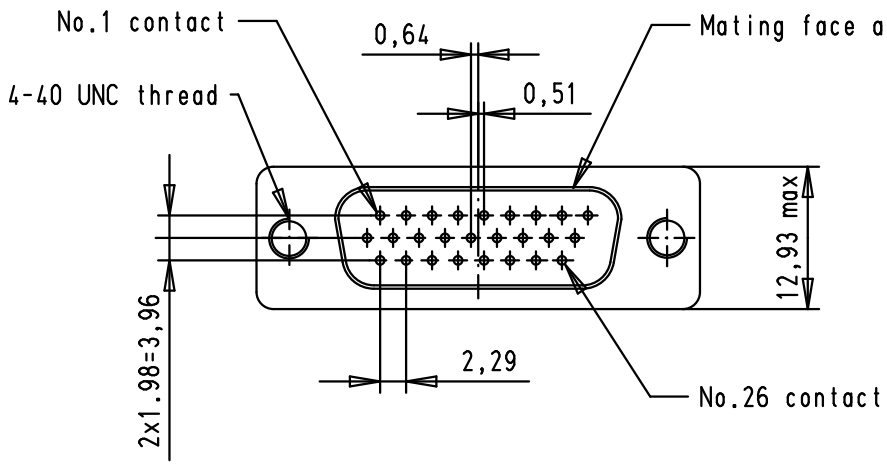

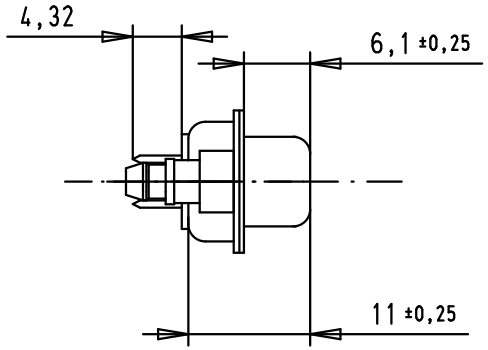

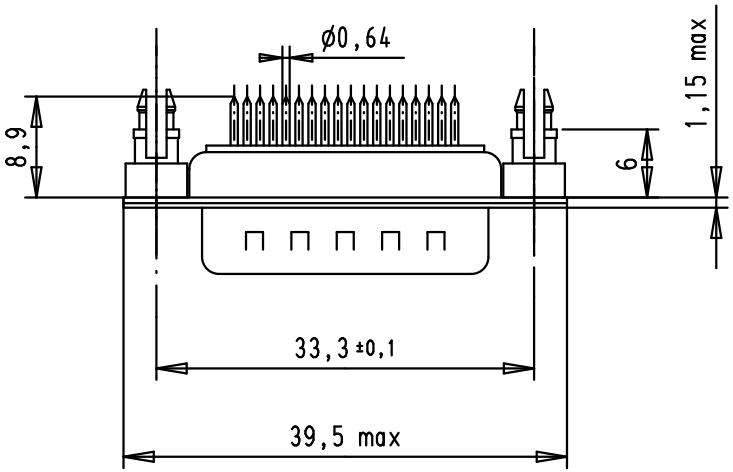

Printed board layout, component side
PCB thickness 1,6mm

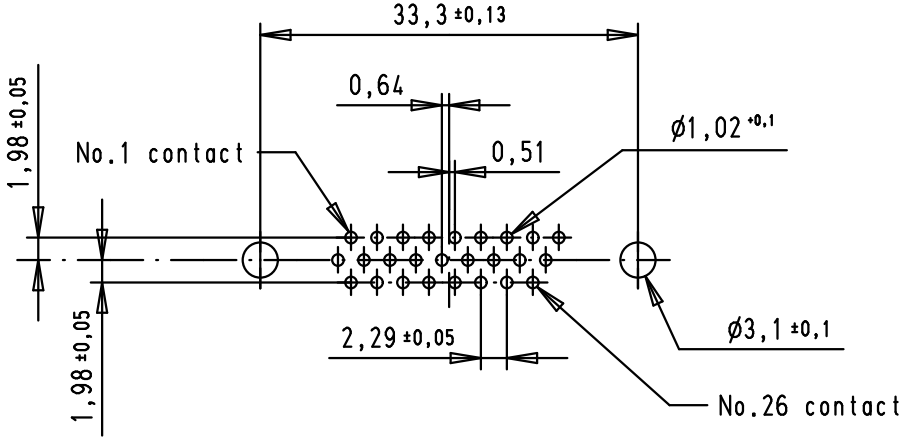

09562615712	0.76 µm Au
09562617712	3
Part number	Performance level

Mod.	Dat.	Name
36182	13/10/10	BH
33245	20/10/05	JMDR
32735	18/03/05	AL
32326	04/01/05	TR
31874	05/03/04	A.C.
31503	03/06/03	S.H.

	Dat.	Name
Detail.	03/06/03	S.H.
Insp.		
Stand.		

All Dim. in mm
Orig. Size DIN A 4

HARTING EURL
F-95972 Paris

Dsub, 26 poles, male, straight solder pins, board locks, shell with dimples

Maßstab/ *Scale* 1.5:1

TB 0956261x712

Sub.

Blatt/ *Page* 1/2