MICRO SWITCH
a Honeywell Division
FED. MFG. CODE 91929

SWITCH - ENCLOSED

CATALOG LISTING
1EN75-R7

X113291-EN

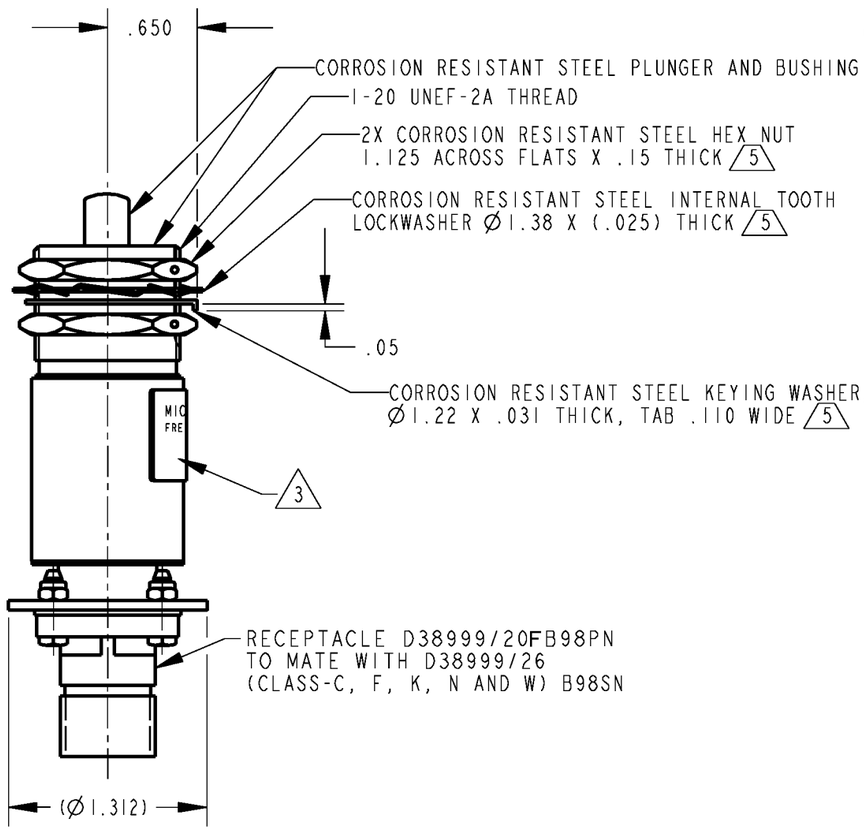

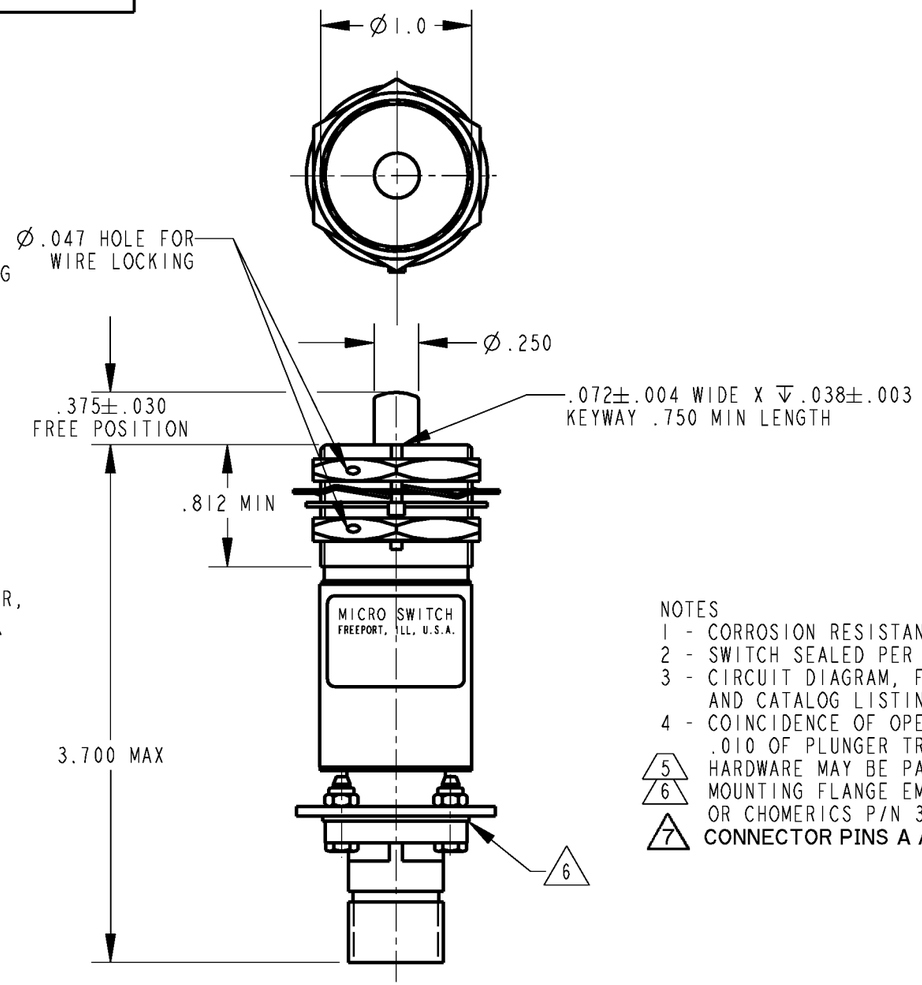

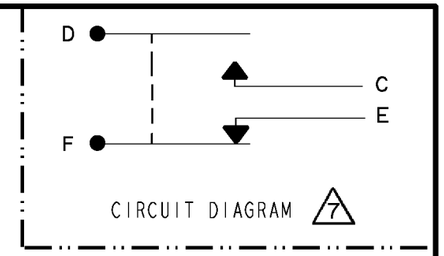

NOTES
1 - CORROSION RESISTANT STEEL ENCLOSURE
2 - SWITCH SEALED PER MIL-PRF-8805 SYMBOL 4
3 - CIRCUIT DIAGRAM, FED. MFG CODE, DATE CODE AND CATALOG LISTING ARE SHOWN ON NAMEPLATE
4 - COINCIDENCE OF OPERATING AND RELEASING POINTS: .010 OF PLUNGER TRAVEL
5 HARDWARE MAY BE PACKAGED UNASSEMBLED PER MIL-PRF-8805
6 MOUNTING FLANGE EMI GASKET BMY P/N CMV10341-005 OR CHOMERICS P/N 30-01-C646-E6434
7 CONNECTOR PINS A AND B HAVE NO CONNECTION

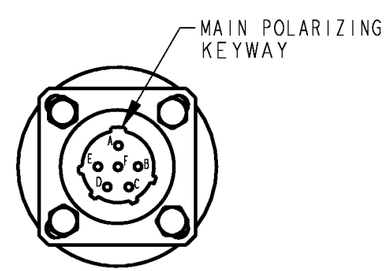

THIS DRAWING COVERS A PROPRIETARY ITEM AND IS THE PROPERTY OF MICRO SWITCH. A DIVISION OF HONEYWELL. THIS DRAWING IS NOT TO BE COPIED OR USED WITHOUT THE APPROVAL OF MICRO SWITCH

THIRD ANGLE PROJECTION

SCALE FULL

DO NOT SCALE PRINT

UNLESS OTHERWISE SPECIFIED TOLERANCES ARE

ONE PLACE	(.0)	±.030
TWO PLACE	(.00)	±.015
THREE PLACE	(.000)	±.005
ANGLES		±

WEIGHT 8.0 OZ MAX

ANSI Y14.5M-1982 APPLIES

CHARACTERISTICS

OPERATING FORCE	6-12 LB
FULL OVERTRAVEL FORCE	30 LB MAX
RELEASE FORCE	4 LB MIN
PRETRAVEL	.040 MAX
DIFFERENTIAL TRAVEL	.020 MAX
OVERTRAVEL	.250 MIN

ELECTRICAL DATA

CONTACT ARRANGEMENT
2X S P N O

LOAD	28 VDC	
	SEA LEVEL	
RES	5	
IND	3	
MOTOR	4	

A	18222	CSL 22 FEB 01		
B	18242	CSL 26 FEB 01		
C	202697	CSL 28 MAR 01		
D	203125	CSL 22 MAY 01		

1EN75-R7	1 OF 1	202697	
CATALOG LISTING	PAGE	RELEASE NO.	REPLACES
M	4		
ISSUE			CHECK
RASTER	LJK	20OCT00	SAV
	DRAWN		CHECK
		20 OCT 00	CHECK