THIS DRAWING IS UNPUBLISHED. RELEASED FOR PUBLICATION -,- .
© COPYRIGHT - By - ALL RIGHTS RESERVED.

LOC	DIST
GP	00

REVISIONS

P	LTR	DESCRIPTION	DATE	DWN	APVD
	A	INITIAL RELEASE	07JUL2015	MY	GG

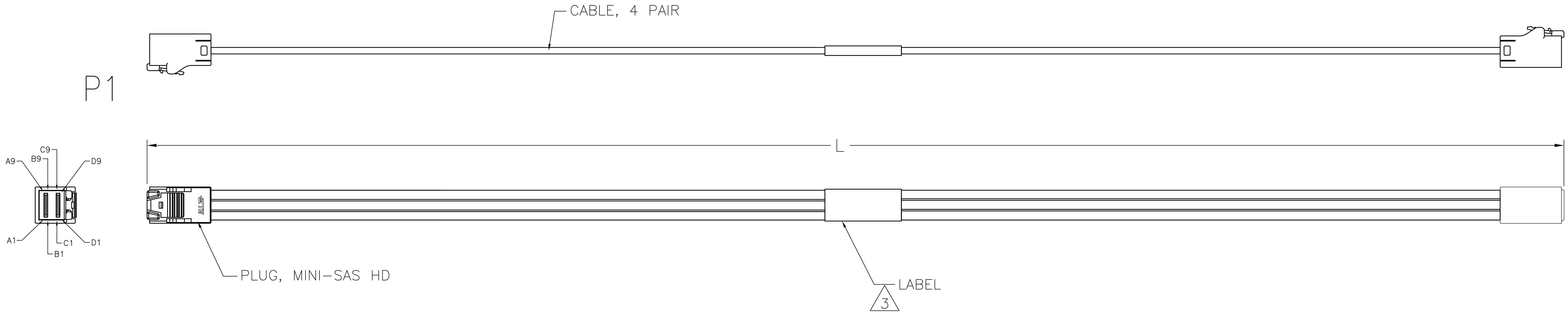

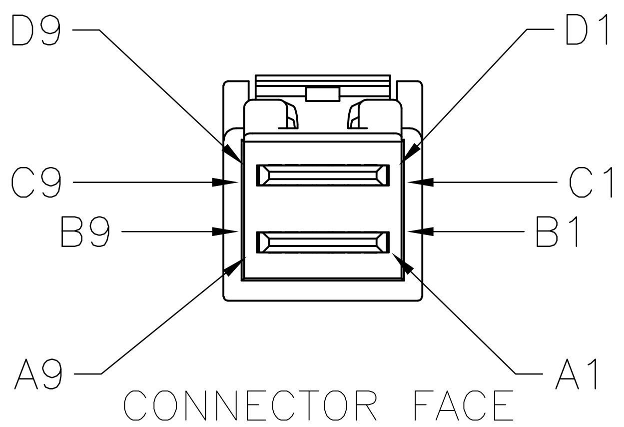

CONNECTOR FACE
-LATCH UP

1. ASSEMBLY TO BE 100% TESTED FOR CONTINUITY, SHORTS, AND OPENS, CABLES ASSEMBLYS ARE ALSO TO BE 100% TESTED FOR SIGNAL INTEGRITY, TO SAS 3.0 REQUIREMENTS.

2. ROHS AND REACH COMPLIANCE: PRODUCT AND PROCESSING MEETS REQUIREMENTS OF TE SPECIFICATION TEC-138-702.

3. (△) LABEL CENTERRED AND LABEL INFORMATION AS BELOW:

Label	Information
TE 2820335-[ ]	TE LOGO AND P/N
___ METERS	LENGTH
MADE IN _____	COUNTRY OF ORIGIN
YYWWSSSS	YYWW IS DATE CODE, SSSS IS SERIAL
(barcode)	BAR FOR YYWWSSSS

4. SEE SHEET #2 FOR WIRING SCHEMATIC.

"L"[MM]	TE P/N
1000 $^{+25}_{-0}$	2820335-4
700 $^{+25}_{-0}$	2820335-3
500 $^{+25}_{-0}$	2820335-2
300 $^{+25}_{-0}$	2820335-1

THIS DRAWING IS A CONTROLLED DOCUMENT.

DIMENSIONS: mm

TOLERANCES UNLESS OTHERWISE SPECIFIED:
0 PLC ± -
1 PLC ± -
2 PLC ± -
3 PLC ± -
4 PLC ± -
ANGLES ± -

MATERIAL: -
FINISH: -

DWN M.YI 16/JUN/2014
CHK G.GUTGOLD 16/JUN/2014
APVD G.GUTGOLD 16/JUN/2014
PRODUCT SPEC —
APPLICATION SPEC —
WEIGHT —

TE Connectivity

NAME: C/A, INTERNAL HD MINI SAS, STR TO STR
85 OHMS, 4X, NON HALOGEN
—

SIZE	CAGE CODE	DRAWING NO	RESTRICTED TO
A2	00779	C-2820335	—

CUSTOMER DRAWING | SCALE N.T.S. | SHEET 1 OF 2 | REV A

2820335

THIS DRAWING IS UNPUBLISHED. RELEASED FOR PUBLICATION - , - .
© COPYRIGHT - By - ALL RIGHTS RESERVED.

LOC	DIST
GP	00

REVISIONS

P	LTR	DESCRIPTION	DATE	DWN	APVD
	-	SEE SHEET 1	-	-	-

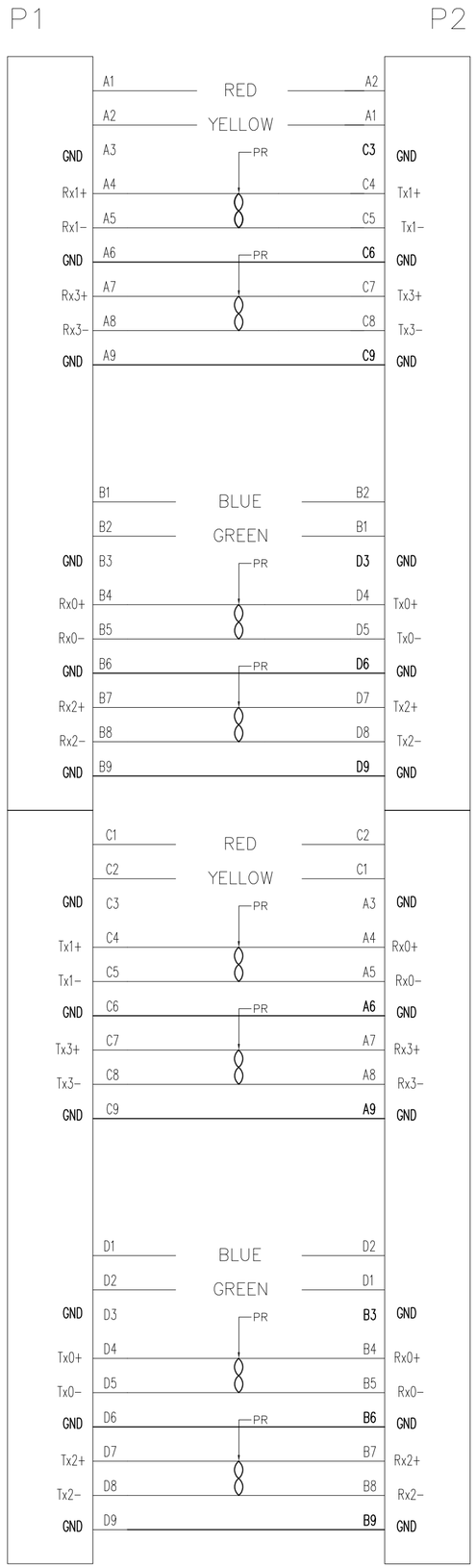

WIRING PATTERN

THIS DRAWING IS A CONTROLLED DOCUMENT.

DIMENSIONS: mm

TOLERANCES UNLESS OTHERWISE SPECIFIED:
0 PLC ± -
1 PLC ± -
2 PLC ± -
3 PLC ± -
4 PLC ± -
ANGLES ± -

MATERIAL -

FINISH -

DWN	M.YI	16/JUN/2014
CHK	G.GUTGOLD	16/JUN/2014
APVD	G.GUTGOLD	16/JUN/2014
PRODUCT SPEC	—	
APPLICATION SPEC	—	
WEIGHT	—	

TE Connectivity

NAME C/A, INTERNAL HD MINI SAS, STR TO STR 85 OHMS, 4X, NON HALOGEN -

SIZE	CAGE CODE	DRAWING NO	RESTRICTED TO
A2	00779	C-2820335	—

CUSTOMER DRAWING | SCALE N.T.S. | SHEET 2 OF 2 | REV A

2820335