REV	ECN NO	REVISIONS	DRN	CKD	APP	DATE
A	———	NEW RELEASE	TWC			

ASSY NO.	LED COLOR (DIFFUSED)	
	TOP POS.	BOTTOM POS.
571-0111-104F	RED	RED
571-0122-104F	GREEN	GREEN
571-0123-104F	GREEN	YELLOW

ATTENTION:
OBSERVE PRECAUTIONS FOR HANDLING ELECTROSTATIC SENSITIVE DEVICES

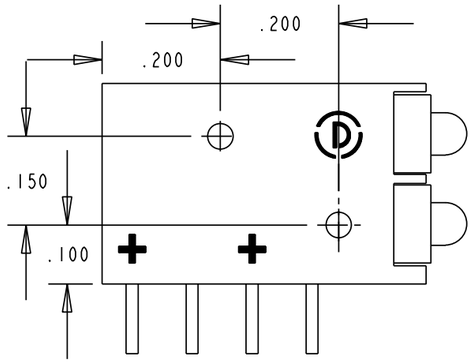

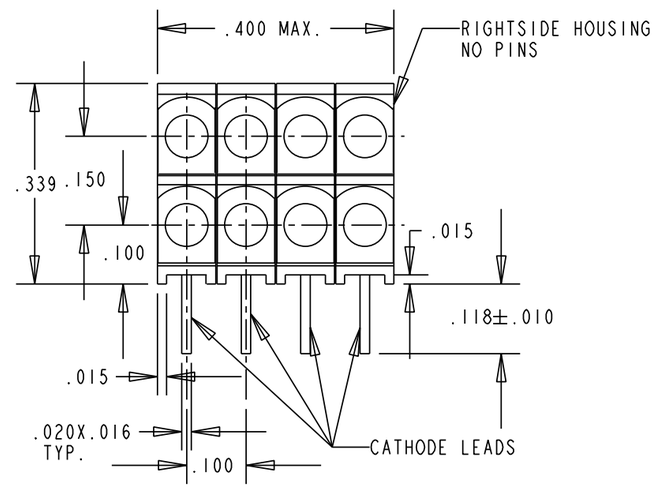

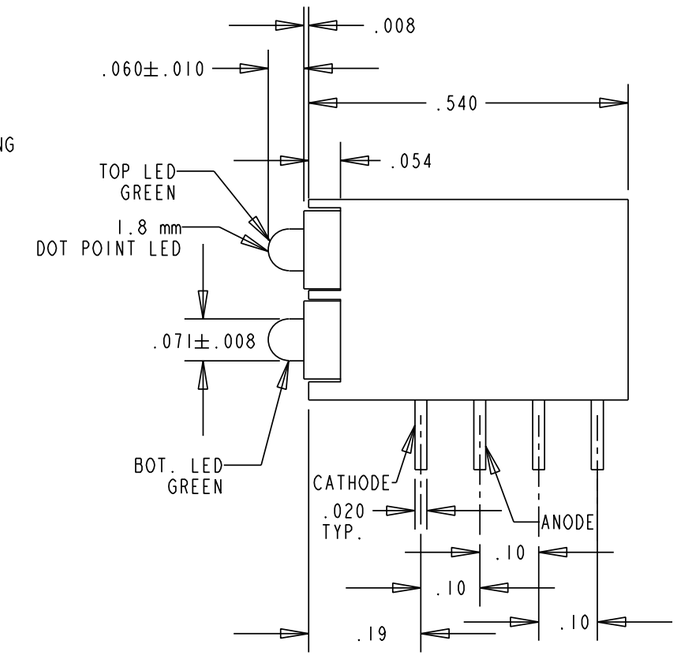

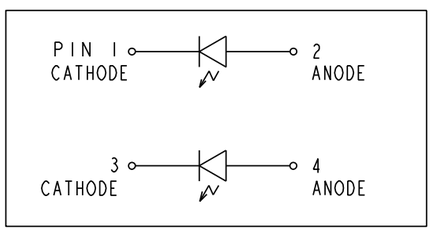

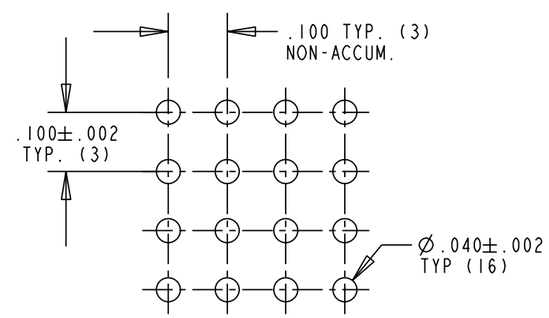

RECOMMENDED P.C.B. HOLE PATTERN

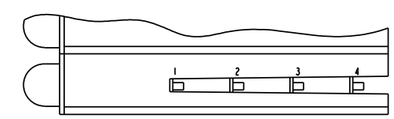

RoHS Compliant 571-01XX-104F 2X4 Array CBI

Part Numbers with the "F" suffix ending are RoHS Compliant.
Example: 571-0123-104F
Packaging is marked with "RoHS Compliant" label or equivalent markings.
Parts can be wave soldered, dip soldered or hand soldered using typical lead-free soldering process with max 260°C temp. for 5 sec.

OPERATING CHARACTERISTICS AT 25°C AMBIENT						
CHARACTERISTICS	COLOR	MIN	TYP	MAX	UNITS	TEST CONDITIONS
LUMINOUS INTENSITY	RED	8	15		mcd	I_F = 10 mA
	YELLOW	5	8			
	GREEN	5	10			
FORWARD VOLTAGE	RED		2.0	2.5	V	I_F = 20 mA
	YELLOW		2.1	2.5		
	GREEN		2.2	2.5		
DOMINANT WAVELENGTH	RED		625		nm	
	YELLOW		588			
	GREEN		568			
PEAK EMISSION WAVELENGTH	RED		627		nm	
	YELLOW		590			
	GREEN		565			
VIEWING ANGLE 2θ1/2	RED		70		Degree	
	YELLOW		70			
	GREEN		70			
CAPACITANCE	RED		15		pF	V_F = 0 V, f = 1 MHz
	YELLOW		20			
	GREEN		15			

ABSOLUTE MAXIMUM RATING AT 25°C AMBIENT	RED	YELLOW	GREEN	UNITS
POWER DISSIPATION	105	105	105	mW
FORWARD CURRENT	30	30	25	mA
DERATING LINEAR FROM 25 °C	.40		.33	mA/°C
REVERSE VOLTAGE	5			V
LEAD SOLDERING TEMPERATURE, 5 SEC., 1/16" FROM BODY	260			°C
OPERATING TEMPERATURE	-40 TO +85			°C
STORAGE TEMPERATURE	-40 TO +85			°C

NOTES:

1. LED LEAD DIMENSIONS ARE MEASURED AT HOUSING EXIT.
2. PIN NUMBERS FOR REFERENCE ONLY, DESIGNATION NON-EXISTENT ON PARTS.
3. DIALIGHT PART NUMBER - 571-01XX-104F (SEE CHART FOR ALL PART NUMBERS).
4. THIS ASSEMBLY CONTAINS ELECTROSTATIC DISCHARGE SENSITIVE DEVICES (ESDS). MAINTAIN ALL PRECAUTIONARY MEASURES DURING ASSEMBLY, HANDLING AND STORAGE IN ACCORDANCE WITH IPC-A-610.

THIS DRAWING AND THE CONTENTS HEREIN ARE CONFIDENTIAL AND THE SOLE PROPERTY OF DIALIGHT. REPRODUCTION OF THIS DRAWING OR CONSTRUCTION OF ANY PARTS WITHIN THIS DRAWING ARE FORBIDDEN WITHOUT THE WRITTEN CONSENT OF DIALIGHT.

SCALE: DRAWING SCALE
ALL DIM'S IN: INCHES (MM)
TOLERANCES: UNLESS OTHERWISE SPECIFIED
FRACTIONS: ±1/64
DECIMALS (.XX): ±.01
DECIMALS (.XXX): ±.005
DECIMALS (.XXXX): ±.0005
ANGLES: ±1°
FINISH:
FSCM 83330

DRAWING NUMBER: C-17403
REV: A
TITLE: 2mm CBI 2X4 ARRAY RoHS COMPLIANT
MATERIAL:

Dialight
1501 ROUTE 34 SOUTH
FARMINGDALE, NJ 07727

SHEET 1 OF 1
FAMILY TABLE: