MATERIAL NUMBER	ALTERNATE NUMBER	STUD SIZE	"S"	"W" MAX	"C" MIN	"L" MAX	PACKAGING
190580021	B-801-14HDX	1/4	.265 (6.73)	.760 (19.30)	.641 (16.28)	1.581 (40.15)	LOOSE PIECE
190580025	B-801-56HDX	5/16	.328 (8.33)	.760 (19.30)	.641 (16.28)	1.581 (40.15)	
190580023	B-801-38HDX	3/8	.390 (9.91)	.760 (19.30)	.641 (16.28)	1.581 (40.15)	
190580027	B-801-76HDX	7/16	.453 (11.51)	.760 (19.30)	.641 (16.28)	1.581 (40.15)	
190580018	B-801-12HDX	1/2	.515 (13.08)	.760 (19.30)	.641 (16.28)	1.581 (40.15)	
190580035	B-828-04HDX	4	.123 (3.12)	.385 (9.78)	.423 (10.74)	1.086 (27.58)	
190580039	B-828-06HDX	6	.146 (3.70)	.385 (9.78)	.423 (10.74)	1.086 (27.58)	
190580045	B-828-08HDX	8	.173 (4.39)	.385 (9.78)	.423 (10.74)	1.086 (27.58)	
190580051	B-828-10HDX	10	.198 (5.03)	.385 (9.78)	.423 (10.74)	1.086 (27.58)	
190580054	B-828-209HDX	209	.209 (5.31)	.385 (9.78)	.423 (10.74)	1.086 (27.58)	
190580019	B-801-12HDXT	1/2	.515 (13.08)	.760 (19.30)	.641 (16.28)	1.581 (40.15)	TAPE MOUNTED
190580036	B-828-04HDXT	4	.123 (3.12)	.385 (9.78)	.423 (10.74)	1.086 (27.58)	
190580040	B-828-06HDXT	6	.146 (3.70)	.385 (9.78)	.423 (10.74)	1.086 (27.58)	
190580046	B-828-08HDXT	8	.173 (4.39)	.385 (9.78)	.423 (10.74)	1.086 (27.58)	
190580053	B-828-10HDXT	10	.198 (5.03)	.385 (9.78)	.423 (10.74)	1.086 (27.58)	

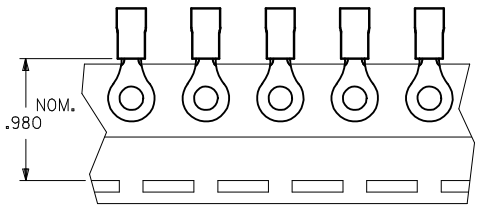

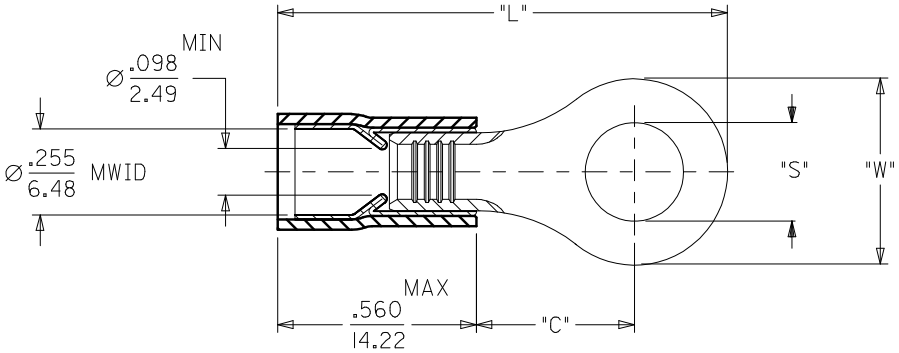

(B) NOTES:
1. MATERIAL: COPPER
   PLATING: ELECTROPLATE TIN
2. FERRULE: TIN-PLATED BRASS
3. INSULATION: YELLOW NYLON
4. MWID=MAXIMUM WIRE INSULATION DIA.
5. ALL DIMENSIONS IN INCHES/(MM).
6. PARTS ARE ROHS COMPLIANT.

CUSTOMER DRAWING

LTR.	REVISIONS
B	CHANGED NYLON FROM BLUE TO YELLOW IPG2014-2101 2014/06/10 GR
A	NEW CUST. DWG. ETC2001-0196 2000/11/17 EDB

DIMENSIONS SHOWN (METRIC) INCH

UNLESS OTHERWISE SPECIFIED TOLERANCES: ANGULAR ± 1/2°

	INCH	METRIC
3 PLACE	± .005	± ---
2 PLACE	± .01	± 0.13
1 PLACE	± ---	± 0.25

DRAFT WHERE APPLICABLE MUST REMAIN WITHIN DIMENSIONS

REVISE ONLY ON CAD SYSTEM

TITLE
AVIKRIMP EXPANDED
RING TONGUE TERMINAL
HEAVY DUTY 16-14 AWG

molex ETC INC.
PINELLAS PARK, FLA. 33781 U.S.A.

SHEET NO. 1 OF 1 | DATE 00/09/29

PART NO. SEE TABLE | DRWG. NO. SD-19058-002

DRWG. BY	EDB	CHK'D. BY	RWD
APP'D. BY	RWD	SCALE	NO:NE

FILE NAME SD19058002 DGN

THIS DRAWING CONTAINS INFORMATION THAT IS PROPRIETARY TO MOLEX-ETC INC. AND SHOULD NOT BE USED WITHOUT WRITTEN PERMISSION.

DIV. ET | SIZE B