NOTES:

1. RECOMMENDED SOLDER: SN60 SOLDER PER FED SPEC QQ-5-571 AND A NON-HALIDE FLUX SIMILAR TO KESTER 197 OR EQUIVALENT.
2. SOLDERABLE AREA.
3. CAPACITANCE: 800pF MIN.
   VOLTAGE: 50VDC MAX.
   CURRENT: 10 AMPS MAX.
   TEMPERATURE: -25°C TO +85°C
4. 0.51 [.020] MAX SWAGED METAL MATERIAL MAY INCREASE THE 0.81 [.032] DIA BY 1.02 [.040] MAX IN THIS AREA ONLY.
5. MATERIAL: BODY: EPOXY
   PIN: COPPER
   GROUND PIN: COPPER ALLOY
6. FINISH : PIN: SILVER
   GROUND PIN: SILVER

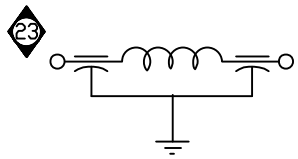

SCHEMATIC

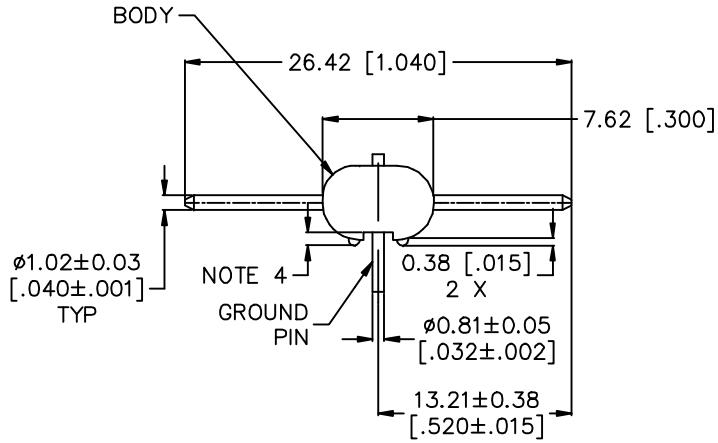

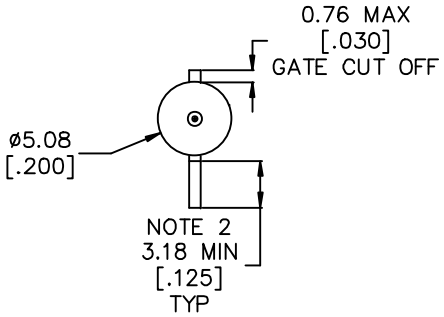

REV. NO.	CHANGE NOTICE
23	CN 211886
22	CN 202351
21	CN 196832 REDRAWN
20	CN 196236 REDRAWN

UNLESS OTHERWISE SPECIFIED DIMENSIONS ARE IN mm [INCHES]

DO NOT SCALE.

TOLERANCES UNLESS OTHERWISE SPECIFIED
Fractions ± 1/64
Dec. .xx±
Dec. .xxx± 0.13 [.005]
Angles ±0° 30'

CODE IDENT. NO. OLSP2

SPECTRUM CONTROL INC.

ERIE, FAIRVIEW PENNSYLVANIA

Dwn. M. WOJTECKI
DATE 7/9/01
Engr. K. Wood
Sheet 1 of 1

Description: PIN AND SLEEVE ASSEMBLY, PC BOARD MOUNT, FILTER

842448-1

Quality Products From The Specialists In Electro-Magnetic Compatibility