molex
one company › a world of innovation

This document was generated on 07/30/2013

PLEASE CHECK WWW.MOLEX.COM FOR LATEST PART INFORMATION

Part Number: 19017-0009

Status: Active

Description: InsulKrimp™ Quick Disconnect, Female, for 18-22 (0.80-0.35mm²) Wire, Mylar Tape, Tab 4.75 x 0.81mm

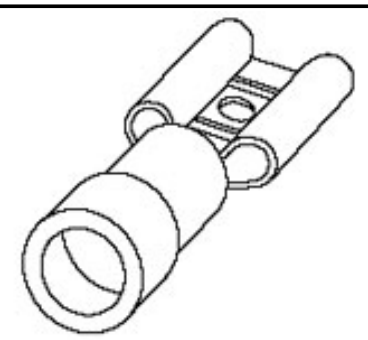

Series

image - Reference only

Documents:

Drawing (PDF)
Product Specification PS-19902-008 (PDF)
Product Specification PS-19902-011 (PDF)
Product Specification PS-19902-015 (PDF)
RoHS Certificate of Compliance (PDF)

Agency Certification

CSA	LR18689
UL	E79133

General

Product Family	Quick Disconnects
Series	19017
Crimp Quality Equipment	Yes
Insulated	No
Product Name	InsulKrimp™
Type	Quick Disconnect
UPC	800753035768

Physical

Barrel Type	Closed
Color - Resin	Red
Flammability	94V-0
Gender	Female
Glow-Wire Compliant	No
Insulation	PVC
Lock to Mating Part	None
Material - Metal	Brass
Material - Plating Mating	Tin
Material - Plating Termination	Tin
Material - Resin	PVC
Net Weight	0.561/g
Orientation	Straight
Packaging Type	Adhesive Tape on Reel
Polarized to Mating Part	No
Tab Thickness	0.81mm
Tab Width	4.75mm
Temperature Range - Operating	-50°C to +105°C
Wire Insulation Diameter	3.40mm max.
Wire Size AWG	18, 20, 22
Wire Size mm²	0.35 - 0.80

Electrical

Voltage - Maximum	600V

Material Info

Old Part Number	AA-2137-032T

Reference - Drawing Numbers

Product Specification	PS-19902-008, PS-19902-011, PS-19902-015
Sales Drawing	SD-19017-003

EU RoHS
ELV and RoHS Compliant
REACH SVHC
Not Reviewed
Low-Halogen Status
Not Reviewed

China RoHS

Need more information on product environmental compliance?

Email productcompliance@molex.com
For a multiple part number RoHS Certificate of Compliance, click here

Please visit the Contact Us section for any non-product compliance questions.

Search Parts in this Series
19017Series

Application Tooling | **FAQ**

Tooling specifications and manuals are found by selecting the products below. Crimp Height Specifications are then contained in the Application Tooling Specification document.

Global

Description	Product #
Crimp Dies for MTA-100 Tape Applicator used in 3BF Press, MTA-105 Tape Applicator used in TM-2000™ Press, and ATP-301 Air Crimping Press for Mylar Tape Mounted Terminals	0192880048
Mini-Mac™ Applicator	0638850800

This document was generated on 07/30/2013
PLEASE CHECK WWW.MOLEX.COM FOR LATEST PART INFORMATION