Alle Rechte vorbehalten/ *All rights reserved*

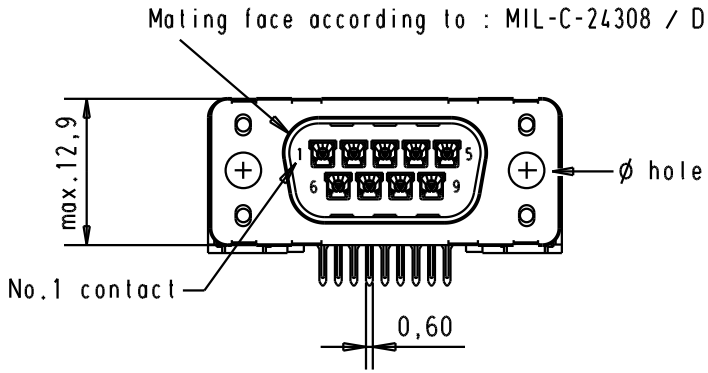

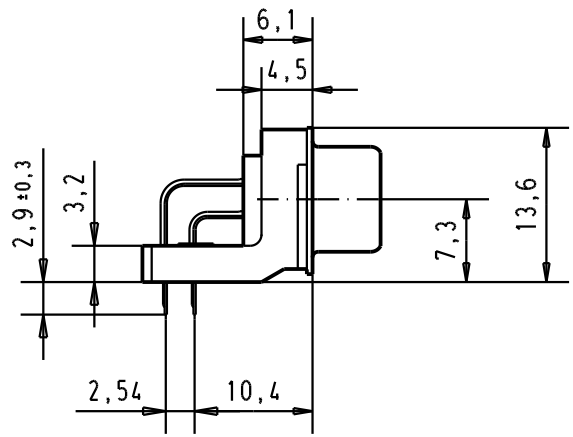

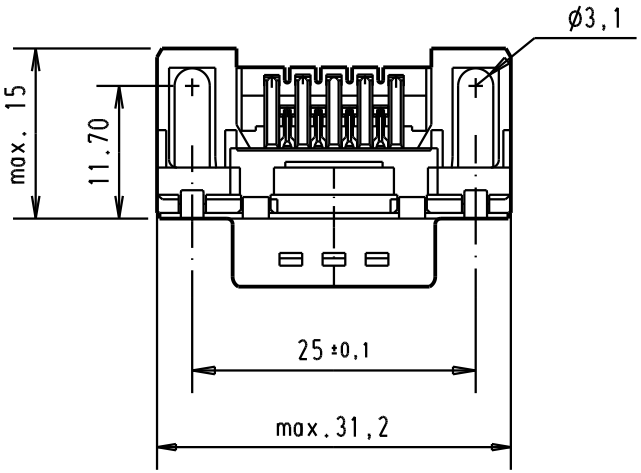

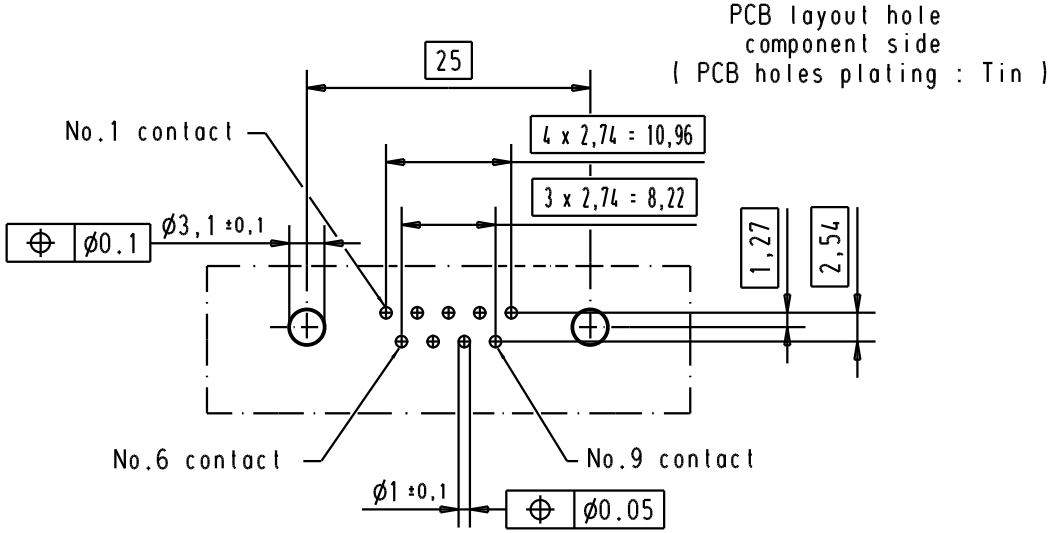

Connector retention and insertion forces on the PCB = 25 / 80 newtons

Part number	ø hole	Performance level	Mod.	Dat.	Name
09 65 122 3800	3.1 ± 0.1	1			
09 65 122 6800	3.1 ± 0.1	2	31892	22/04/04	JH
09 65 122 7800	3.1 ± 0.1	3	27960	11/dec/00	ALSPACE

	Dat.	Name
Detail.	11/dec/00	ALSPACE
Insp.		
Stand.		

All Dim. in mm
Orig. Size DIN A 4

D-Sub 09 poles standard angle male,solder pin with hole

Maßstab/ *Scale* 1.5:1

HARTING EURL
F-95972 Paris

TB 0965122x80x

Sub.

Blatt/ *Page* 1/3